MIETITREBBIE & FALCIACONDIZIONATRICI

COMBINE HARVESTERS & WINDROWERS

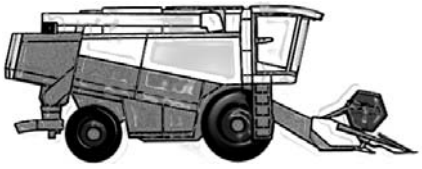

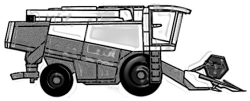

LAME A SPEZZONI SISTEMA RM
Sectional Knives RM System

LAME A SPEZZONI "ORIGINALI RI.MA"
"ORIGINAL RIMA" SECTIONAL KNIVES

Un comodo sistema per sostituire la lama
An easy system to substitute Your cutting knife

NESSUN PROBLEMA DI TRASPORTO
NO MORE TRANSPORT PROBLEMS

La lunghezza massima del segmento è di soli 2,40 mt. E' quindi comodamente trasportabile in automobile
The maximum lenght of the RIMA sectional knives is 2,40 mts

RAPIDA SOSTITUZIONE DELLE SEZIONI LAMA
FAST SUBSTITUTION OF THE KNIFE SECTIONS

Tutte le sezioni e le teste lama sono montate con viti, quindi la sostituzione è semplice anche sul campo con una comune chiave fissa.
All the knife heads and sections are assembled with bolts for an easy substitution even on the field

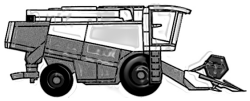

LAME A SPEZZONI SISTEMA RM

Sectional Knives RM System

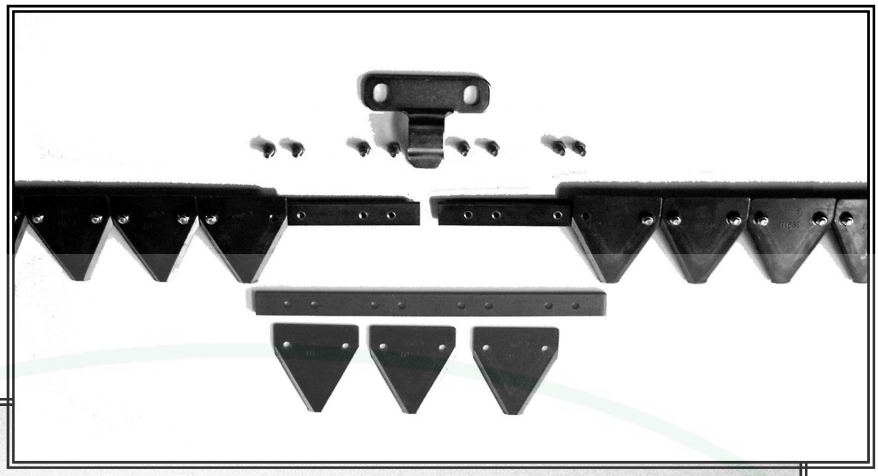

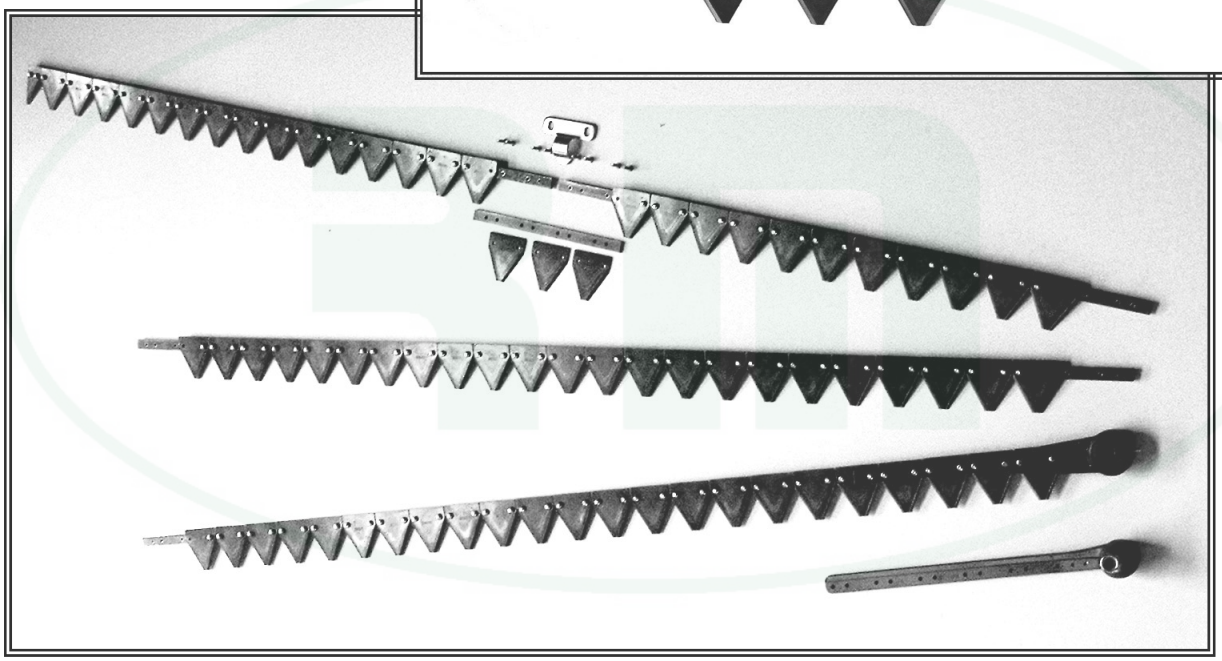

For all kind of Combines!
Easy Fitting!
No transport problem anymore!
Bolt-on sections for fast replacement on the field!
No additional packing cost!

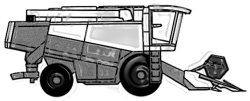

SISTEMA DI TAGLIO BREVETTATO!

Fornitore ufficiale del primo impianto LAVERDA, J. DEERE, DEUTZ-FAHR e MDW-FORTSCHRITT

CLAAS

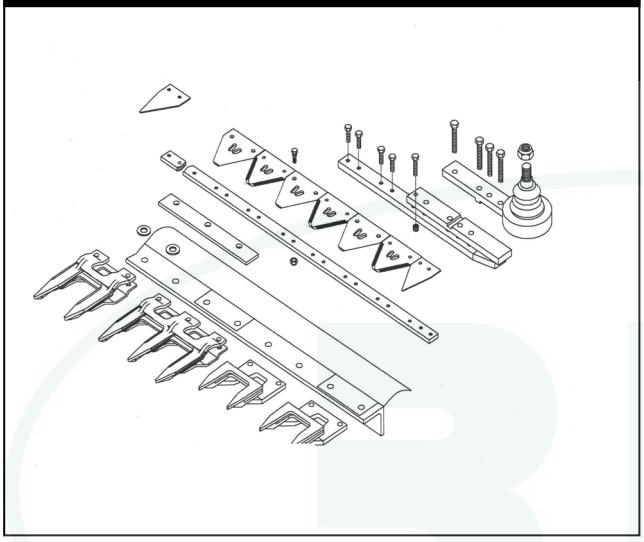

JOHN DEERE

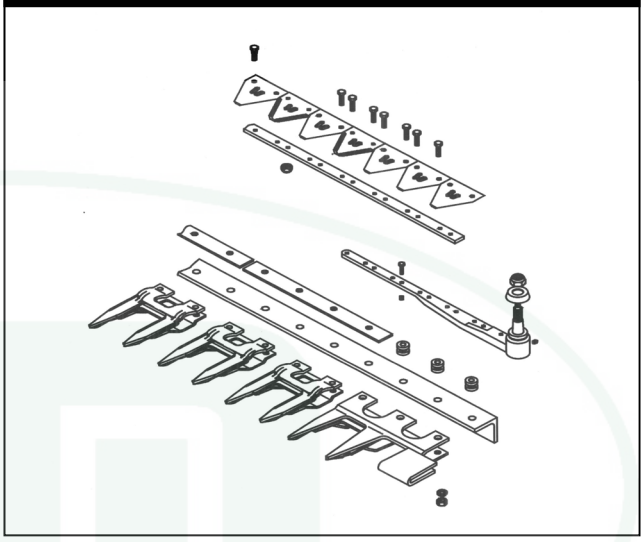

SISTEMA DI TAGLIO ESCLUSIVO ADATTABILE A TUTTI I TIPI DI MIETITREBBIA!

DEUTZ FAHR

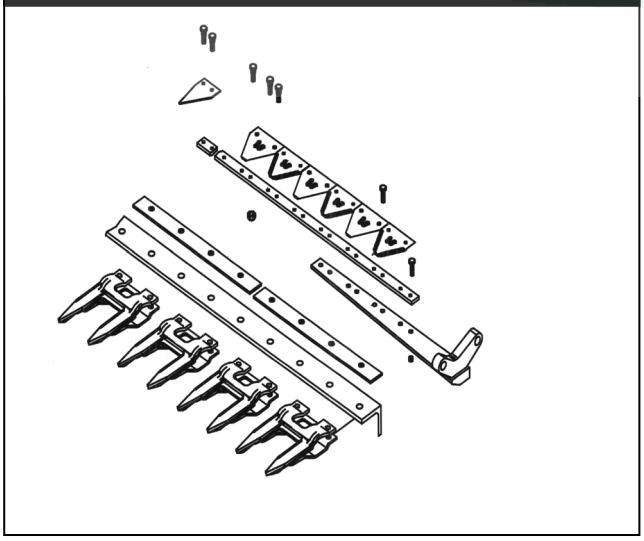

LAVERDA

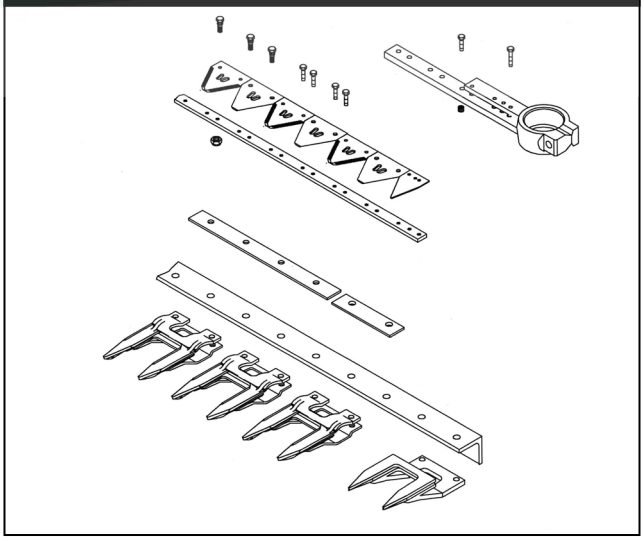

RI.MA – RAPPRESENTANTE ESCLUSIVO PER L'ITALIA E PAESI MEDITERRANEI DA OLTRE 15 ANNI!

Il vostro specialista per il taglio
Your header specialist

Il nuovo alzaspighe ASX !

The new coplifter ASX !

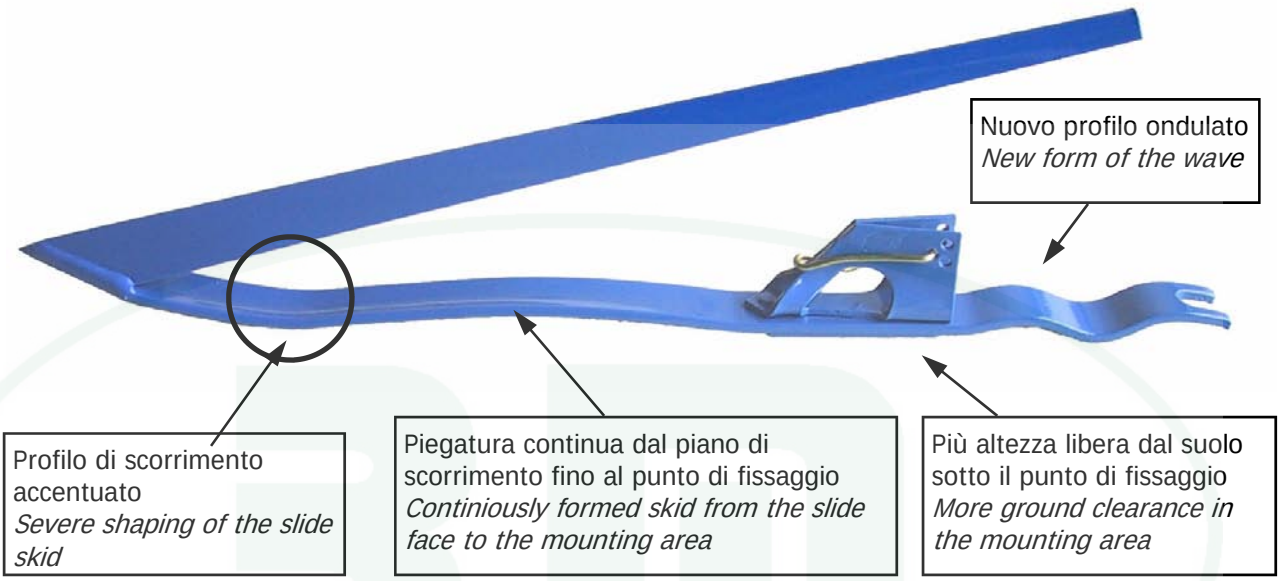

La sezione lama Pro Cut...
...il nostro speciale trattamento termico si adatta perfettamente al vostro sistema di taglio. La zincatura protegge dalla corrosione. Solamente la **sezione lama originale Pro Cut** garantisce l'uso senza problemi secondo lo standard di qualità Schumacher!

The Pro Cut knife section...
*...is perfectly adjusted to our cutting system due to a special hardening process. The galvanized design safes the section against corrosion. Only the **Original Pro Cut knife section** guarantees a trouble free use according to the Schumacher quality standard!*

Il dente doppio...
...lo speciale acciaio temperato con cui è prodotto rende la superficie estremamente dura e resistente all'usura e la sua costruzione modulare gli consente di raggiungere una stabilità orizzontale e verticale molto superiore al dente stampato tradizionale.

The double guard...
...consists out of a high-quality hardened steel and due to this it has an extremely hard and wear-resistant surface. Because of the stable design, the vertical and lateral stability achieved is many times higher than in the case of conventional forged cutting guards.

La scatola movimento lama Pro-Drive...
...l'uso di ingranaggi con rotazione satellitare consente un movimento della lama assolutamente lineare. La corsa prodotta sia nella scatola orizzontale che in quella verticale arriva al 100% sulla lama di taglio.

The Pro-Drive knife drive...
...is using planetary gears and has an absolutely linear knife movement due to this. The stroke of the horizonal or vertical knife drives arrive 100 % at the knife.

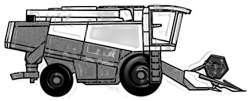

CLAAS
Barra di Taglio - *Cutting Bar*

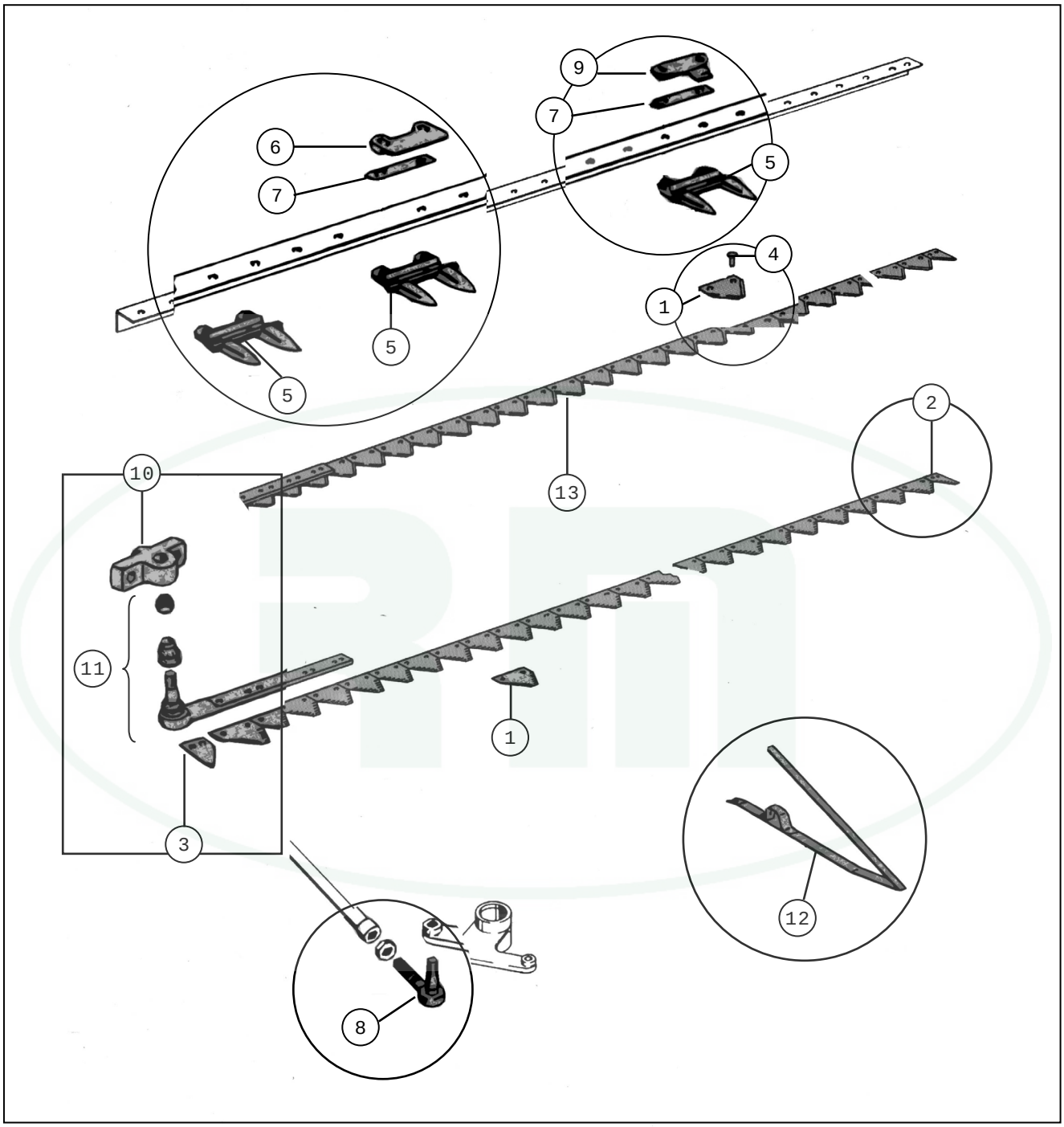

14

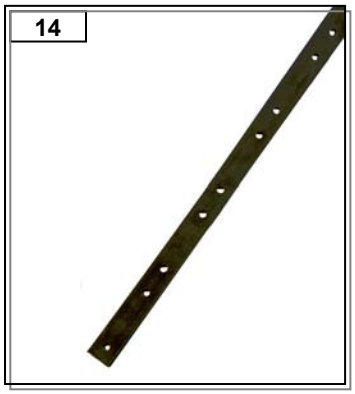

15

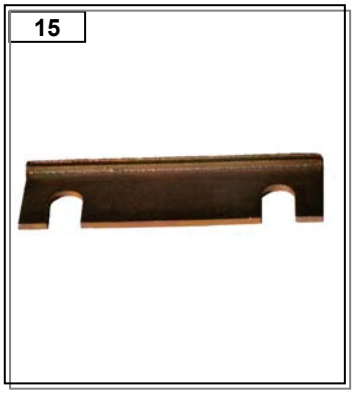

16

US = rigata sotto
TS = rigata sopra

TTQST = testa tonda quadro sotto t.
TT = testa tonda
TPSV = testa piana svasata

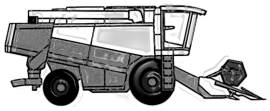

CLAAS

Pos.	Codice Originale	Codice RIMA	Descrizione Description	Applicazione Application	Conf. Pack.
			BARRA DI TAGLIO *Cutterbar*		
01	522187	RM10-008	Knife section	DIN80R - 2,0mm.	25
	611203	RM10-009	Knife section	2,7mm.	25
	611208	RM10-145	Knife section	676234 - 2,7mm.	25
	611316	RM10-010	Knife section	2,7mm.	25
	615007	RM10-256	Knife section	2" - segmenti giunzione	25
	615008	RM10-257	Knife section	2" - segmenti giunzione	25
	616999	RM10-234	Knife section	611203 OV	25
	650561	RM10-014	Knife section	SOIA - 2,7mm.	25
	676234	RM10-011	Knife section	2,7mm.	25
	676239	RM10-148	Knife section	2,7mm.	25
	688951	RM10-251	Knife section	RISO - 3,5mm. - 5802 247 21	25
	688959	RM10-013	Knife section	RISO - 2,7mm. - 5802 233 21	25
	688964	RM10-012	Knife section	RISO - 2,7mm. - 5802 159 21	25
02	611204	RM10-290	Half section	611319 - 2,7mm.	25
	615001	RM10-528	Half section	2,7mm.	25
	688962	RM10-018	Half section	2,7mm.	25
03	522189	RM10-100	Guide		5
	615306	RM10-254	Guide	MEGA/DOM/COMM/LEX	5
	616286	RM10-050	Thick	676232	5
	616998	RM10-255	Guide	LEXION	5
04		RM10-281	Screw	5x32	50
	235463	RM10-529	Rivet	6x18	2
	235464	RM10-530	Rivet	6x28	2
	237054	RM10-531	Rivet	6x30	2
	237663	RM10-532	Rivet	6x17	2
	626406	RM10-533	Bolt	1/4 W x 25mm.	100
	626407	RM10-534	Bolt	1/4 W x 16mm.	100
	626408	RM10-587	Nut		1
	650562	RM10-015	Screw	5x16	50
	650564	RM10-016	Nut	M5	50
05	522182	RM10-003	Simple finger	K6S	1
	522183	RM10-017	Simple finger		1
	626296	RM10-585	Double finger		1
	650556	RM10-004	Quadruple finger	SOIA - GB310	1
	676235	RM10-002	Double finger	626295-648406-648407-676249	1
	727427	RM10-001	Double finger		1
06	613017	RM10-141	Knife clip		10

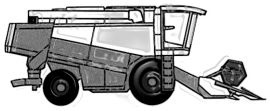

CLAAS

Pos.	Codice Originale	Codice RIMA	Descrizione Description	Applicazione Application	Conf. Pack.
07	673753	RM10-146	Thick	0,5mm.	25
08	670098	RM10-056	Ball joint	22x1,5	1
09		RM1402	Knife clip RM knives	universale	10
	615343	RM10-261	Knife clip		10
	626748	RM10-586	Knife clip		10
	626749	RM10-263	Knife clip		10
	650557	RM10-006	Knife clip	SOIA - 89826150	10
	676236	RM10-005	Knife clip	321114850	10
	688954	RM10-134	Knife clip	RISO	10
	688955	RM10-135	Knife clip	RISO	10
10	670395	RM10-536	Flange		1
11	100144	RM10-054	Knife head	670120 - Dominator	1
	522190	RM10-051	Knife head	Mercator	1
	611217	RM10-161	Knife head		1
	613304	RM10-101	Knife head	PMA	1
	615003	RM10-267	Knife head	LEXION - 4,50 mts	1
	615731	RM10-266	Knife head	LEXION - 5,40 mts	1
	615736	RM10-269	Knife head	LEXION - 5,40 mts	1
	616997	RM10-268	Knife head	LEXION - 4,50 mts	1
	626411	RM10-265	Knife head	670406 - barre da 3,90 a 6,60 mts	1
	626755	RM10-635	Knife head		1
	626756	RM10-264	Knife head	626411 - lame a viti	1
	676231	RM10-052	Knife head		1
	688030	RM10-235	Knife head	RISO	1
	688961	RM10-053	Knife head	RISO	1
12	176045	RM10-160	Bolt	209023025	25
	610294	RM10-082	Crop lifter	CM400 - 111594107	1
	626299	RM10-503	Crop lifter	CM300-610272	1
13	610643	RM10-094	Complete knife		1
	610644	RM10-048	Complete knife		1
	610645	RM10-095	Complete knife		1
	610646	RM10-049	Complete knife		1
	611022	RM10-047	Complete knife	DOM/MEGA - 690476	1
	611210	RM10-032	Complete knife	DOM.48/58	1
	611211	RM10-033	Complete knife	DOM.48/58	1
	611212	RM10-046	Complete knife	DOM.48/58	1
	611213	RM10-036	Complete knife	DOM/MEGA/COMM	1
	611214	RM10-037	Complete knife	DOM/MEGA/COMM	1
	611215	RM10-116	Complete knife	DOM.96/106	1

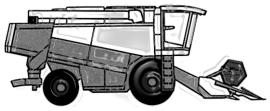

CLAAS

Pos.	Codice Originale	Codice RIMA	Descrizione Description	Applicazione Application	Conf. Pack.
13	611222	RM10-035	Complete knife	DOM/MEGA/COMM	1
	611229	RM10-034	Complete knife	DOM/MEGA	1
	613303	RM10-098	Complete knife	PMA	1
	614304	RM10-099	Complete knife	PMA	1
	615730	RM10-273	Complete knife	LEXION	1
	615735	RM10-271	Complete knife	LEXION	1
	616451	RM10-579	Complete knife	4,50 611203 (626411)	1
	616481	RM10-641	Complete knife	5,10 611203 (626411)	1
	616970	RM10-274	Complete knife	LEXION	1
	616980	RM10-272	Complete knife	LEXION	1
	616985	RM10-270	Complete knife	LEXION	1
	626615	RM10-539	Complete knife	LEXION	1
	626618	RM10-578	Complete knife	LEX - 611203 SENZA TESTA	1
	626628	RM10-540	Complete knife	DOM/MEGA/COMM/LEX - s/testa	1
	626727	RM10-036/V	Complete knife	DOM/MEGA/COMM/LEX	1
	626728	RM10-037/V	Complete knife	DOM/MEGA/COMM/LEX	1
	626729	RM10-539/V	Complete knife	LEX - 5,40 611203 (626411)	1
	626737	RM10-275/V	Complete knife	DOM/MEGA/COMM/LEX	1
	626738/V	RM10-276/V	Complete knife	DOM/MEGA/COMM/LEX	1
	626739/V	RM10-277/V	Complete knife	DOM/MEGA/COMM/LEX	1
	626754/V	RM10-278/V	Complete knife	DOM/MEGA/COMM/LEX	1
	630432	RM10-544	Complete knife	DOM/MEGA/COMM/LEX - s/testa	1
	630891	RM10-277/S	Complete knife - sectional	DOM/MEGA/COMM/LEX	1
	630892	RM10-276/S	Complete knife - sectional	DOM/MEGA/COMM/LEX	1
	630893	RM10-275/S	Complete knife - sectional	DOM/MEGA/COMM/LEX	1
	630936	RM10-580	Complete knife	3,90 611203 (626411)	1
	632985	RM10-545	Complete knife	DOM/MEGA/COMM/LEX - s/testa	1
	650565	RM10-042	Complete knife	SOIA	1
	650567	RM10-043	Complete knife	SOIA	1
	650569	RM10-044	Complete knife		1
	651640	RM10-030	Complete knife		1
	666741	RM10-278/S	Complete knife - sectional	DOM/MEGA/COMM/LEX	1
	666747	RM10-539/S	Complete knife - sectional		1
	666748	RM10-641/S	Knife section - sectional		1
	666749	RM10-579/S	Complete knife - sectional		1
	666750	RM10-580/S	Complete knife - sectional		1
	666754	RM10-037/S	Complete knife - sectional	DOM/MEGA/COMM	1
	666781	RM10-036/S	Complete knife - sectional	DOM/MEGA/COMM/LEX	1
	666782	RM10-035/S	Complete knife - sectional	DOM/MEGA/COMM	1
	670130	RM10-096	Complete knife	DOM.85	1
	670248	RM10-154	Complete knife	DOM/MEGA/COMM/LEX - s/testa	1

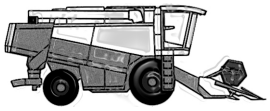

CLAAS

Pos.	Codice Originale	Codice RIMA	Descrizione Description	Applicazione Application	Conf. Pack.
13	670292	RM10-106	Complete knife	DOM.85	1
	670405	RM10-276	Complete knife	DOM/MEGA/COMM/LEX	1
	670419	RM10-277	Complete knife	DOM/MEGA/COMM/LEX	1
	670423	RM10-144	Complete knife	DOM/MEGA/COMM/LEX - s/testa	1
	670426	RM10-275	Complete knife	DOM/MEGA/COMM/LEX	1
	670429	RM10-278	Complete knife	DOM/MEGA/COMM/LEX	1
	670450	RM10-143	Complete knife	DOM/MEGA/COMM/LEX - s/testa	1
	670469	RM10-546	Complete knife	DOM/MEGA/COMM/LEX - s/testa	1
	674257	RM10-107	Complete knife	DOM.85	1
	676230.1	RM10-108	Complete knife	DOM68/96/106	1
	676230.2	RM10-109	Complete knife	DOM68/96/106	1
	676237.1	RM10-110	Complete knife	DOM68/96/106	1
	676237.2	RM10-111	Complete knife	DOM68/96/106	1
	676307.1	RM10-112	Complete knife	DOM68/96/106	1
	676307.2	RM10-113	Complete knife	DOM68/96/106	1
	688029	RM10-041	Complete knife	RISO	1
	688950	RM10-045	Complete knife	RISO	1
	688958	RM10-119	Complete knife	RISO	1
	688967	RM10-039	Complete knife	RISO	1
	688968	RM10-040	Complete knife	RISO	1
	690476	RM10-163	Complete knife	DOM/MEGA - 611022	1
	727160	RM10-031	Complete knife	DOM48/58	1
	766960	RM10-242	Complete knife	RISO	1
	766961	RM10-243	Complete knife	RISO	1
14		RM10-019	Knife back	20x6	1
		RM10-020	Knife back	20x6	1
		RM10-021	Knife back	20x6	1
		RM10-022	Knife back	20x6	1
		RM10-023	Knife back	20x6	1
		RM10-024	Knife back	20x6	1
		RM10-025	Knife back	20x6	1
		RM10-026	Knife back	25x8	1
		RM10-027	Knife back	25x8	1
		RM10-028	Knife back	25x8	1
		RM10-029	Knife back	55x610x6	1
		RM10-075	Knife back	20x6	1
		RM10-159	Knife back	20x6	1
		RM10-280	Knife back	20x6	1
15	522181	RM10-007	Wearing plate	206196	20
16	522184	RM10-156	Finger plate	C2405	25

Notes

CLAAS
Comando Lama - *Gearbox*

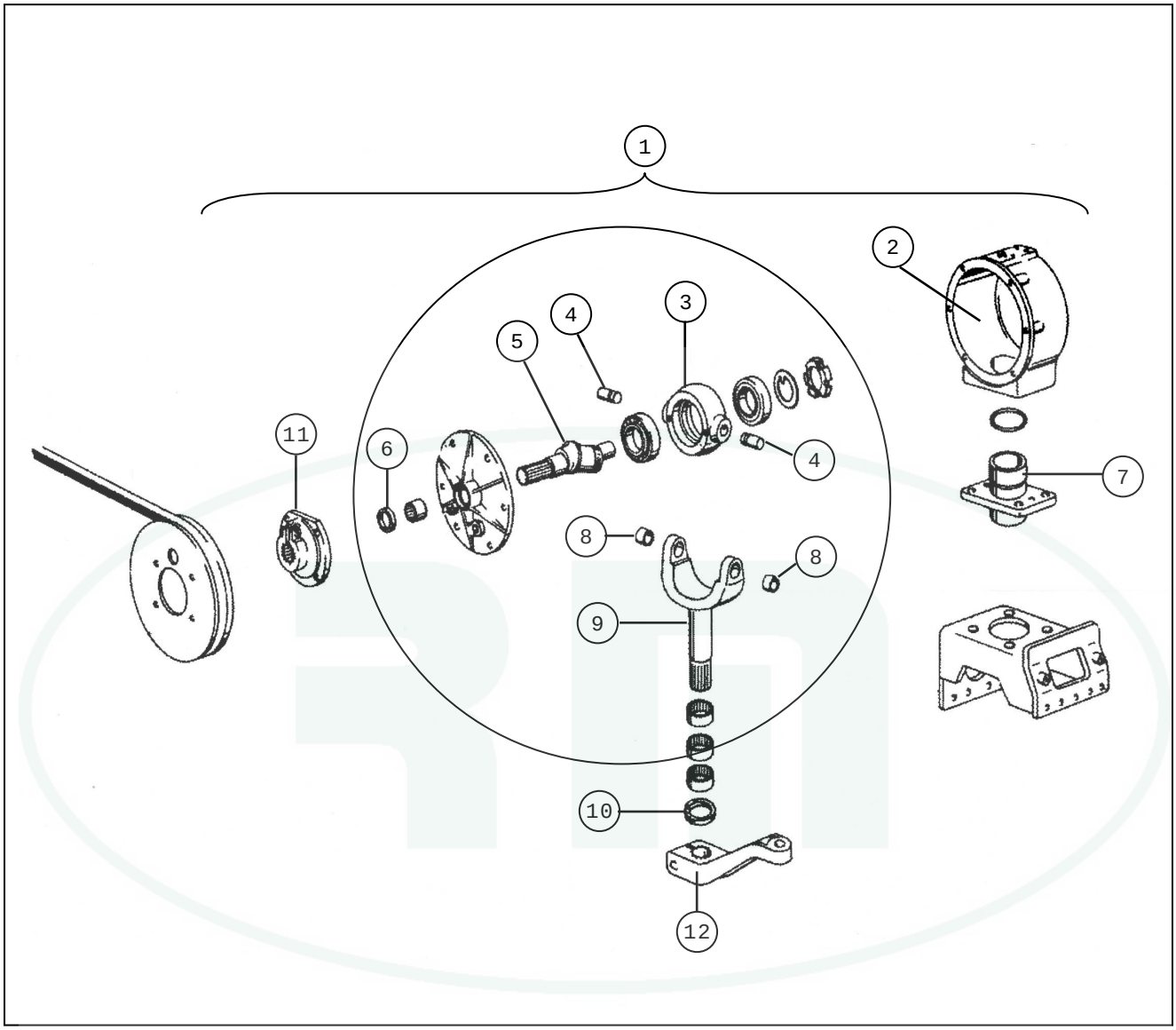

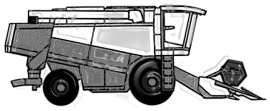

CLAAS

Pos.	Codice Originale	Codice RIMA	Descrizione Description	Applicazione Application	Conf. Pack.
			COMANDO LAMA *Gearbox*		
01	643656	RM10-166	Gearbox	DOM/COMM/MEGA	1
02	643660	RM10-168	Housing	DOM/COMM/MEGA	1
03	637399	RM10-131	Carter	MEGA	1
	643402	RM10-142	Carter	DOM/COMM/MEGA	1
04	643404	RM10-164	Pivot	DOM/COMM/MEGA	1
05	649989	RM10-170	Shaft	DOM/COMM/MEGA	1
06	238348	RM10-128	Ring	DOM/COMM/MEGA	1
07	643659	RM10-167	Support	DOM/COMM/MEGA	1
08	643628	RM10-165	Bushing	DOM/COMM/MEGA	1
09	637998	RM10-132	Fork	DOM/MEGA/LEXION	1
	643403	RM10-149	Fork	DOM/COMM/MEGA	1
10	215338	RM10-124	Seal	DOM/COMM/MEGA	1
11	670401	RM10-172	Hub	DOM/COMM/MEGA	1
12	648116	RM10-169	Lever	DOM/COMM/MEGA	1
	670392	RM10-171	Lever	DOM/COMM/MEGA	1

CLAAS

Comando Barra Oscillante

Oscillating Drive Arm

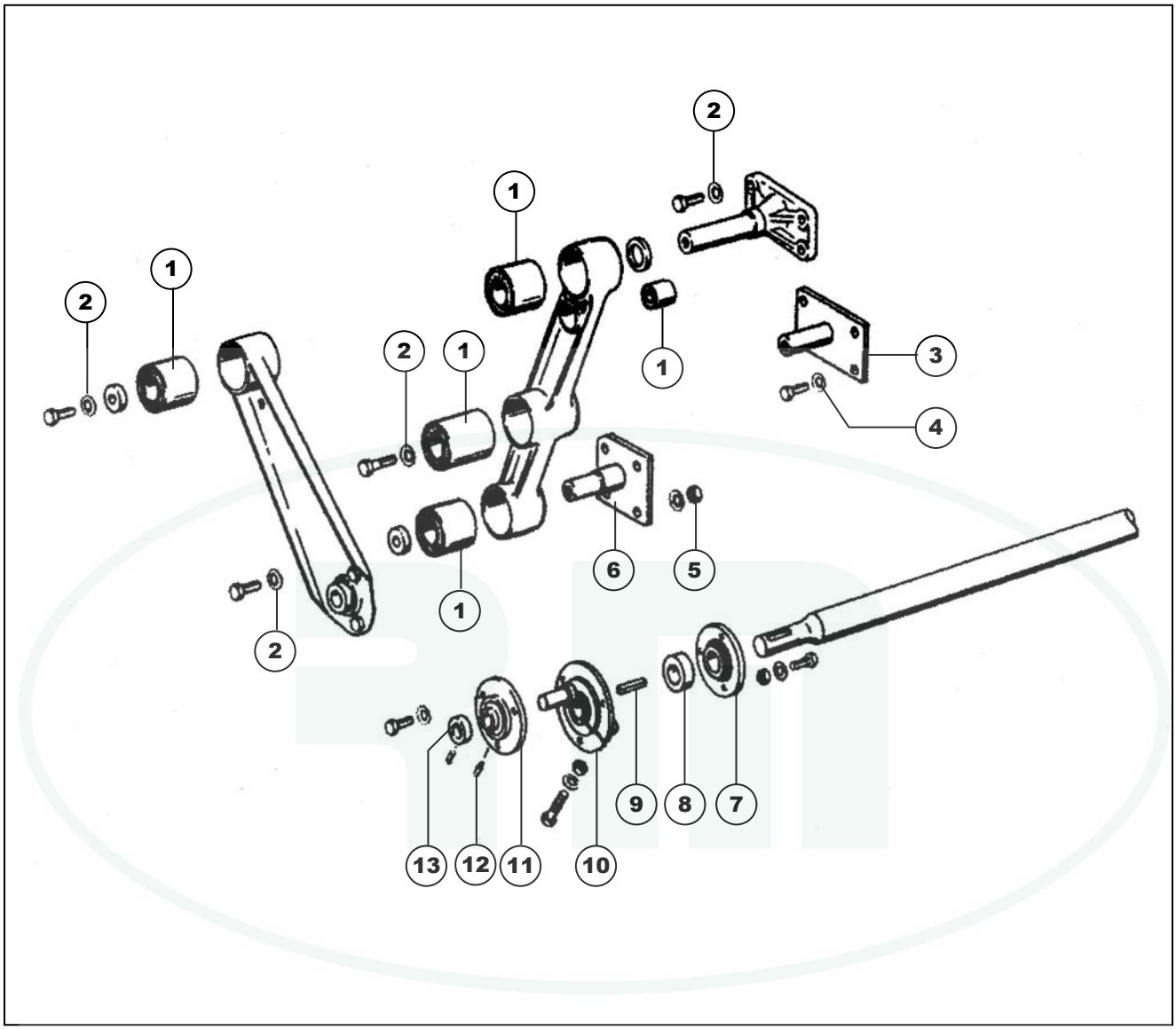

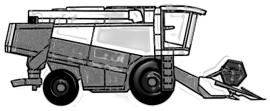

CLAAS

Pos.	Codice Originale	Codice RIMA	Descrizione Description	Applicazione Application	Conf. Pack.
			COMANDO BARRA OSCILLANTE *Oscillating Drive Arm*		
01	072744	RM10-611	Megu Lager		1
	633672	RM10-623	Megu Lager		1
	645693	RM10-624	Megu Lager		1
	647429	RM10-612	Megu Lager		1
	647430	RM10-638	Megu Lager		1
	647431	RM10-639	Megu Lager		1
	647464	RM10-613	Megu Lager		1
	647465	RM10-614	Megu Lager		1
	647466	RM10-615	Megu Lager		1
	647467	RM10-616	Megu Lager		1
	647468	RM10-617	Megu Lager		1
	687355	RM10-610	Megu Lager		1
	751251	RM10-618	Megu Lager		1
	751252	RM10-619	Megu Lager		1
	751253	RM10-620	Megu Lager		1
	751254	RM10-621	Megu Lager		1
	751335	RM10-622	Megu Lager		1
02	239389	RM10-279	Washer		1
03	647451	RM10-625	Bearing support		1
04	239388	RM10-626	Washer		1
05	236172	RM10-627	Nut		1
06	647454	RM10-628	Bearing support		1
07	603144	RM10-630	Support unit		1
08	616067	RM10-628	Ring		1
09	238212	RM10-629	Key		1
10	600790	RM10-636	Hub		1
	600791	RM10-637	Hub		1
11	647393	RM10-632	Support unit		1
	662624	RM10-633	Support unit		1
12	236942	RM10-634	Greaser		1
13	610447	RM10-462	Ring	DOM/COMM/MED/MEGA/LEX/JAG	1

CLAAS

Coclea - *Auger*

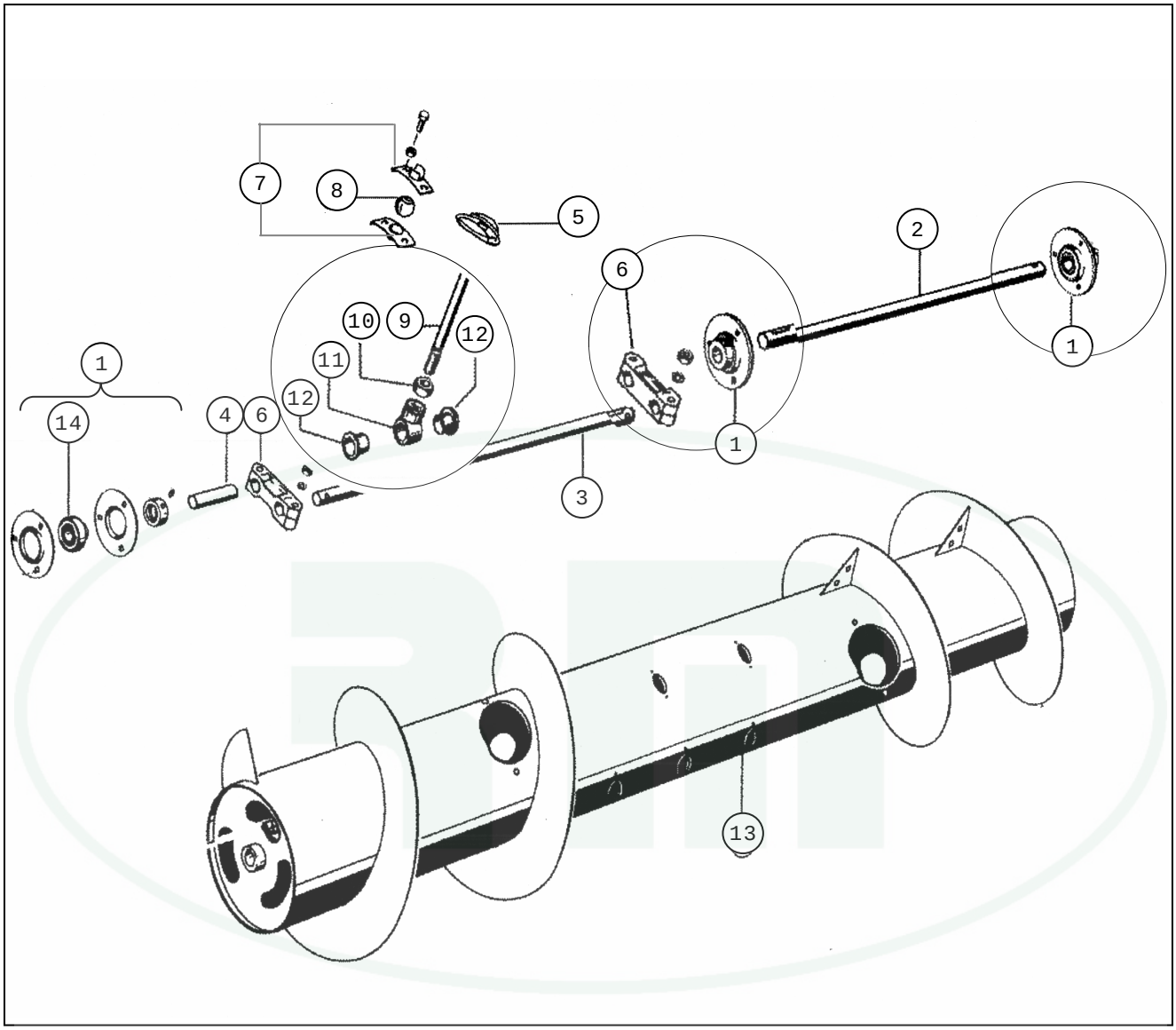

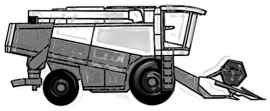

CLAAS

Pos.	Codice Originale	Codice RIMA	Descrizione Description	Applicazione Application	Conf. Pack.
			COCLEA *Auger*		
	610482	RM10-593	Rubber bearing		10
01	636340	RM10-298	Bearing		1
02	674276	RM10-348	Shaft	DOMINATOR	1
03	670478	RM10-349	Shaft	DOMINATOR	1
04	670477	RM10-350	Shaft element	MEGA/COMM/DOM	1
05	603754	RM10-061	Guide	777199	25
06	676144	RM10-351	Lever	MEGA/COMM/DOM	1
	676145	RM10-352	Lever	MEGA/COMM/DOM	1
07	610428	RM10-592	Support kit		1
	610492/3	RM10-103	Support kit	DOM.68/76	1
08	610489	RM10-105	Ball guide	DOM.68/76	1
09	603759	RM10-060	Retractable finger	MEGA/COMM/DOM	10
	603759/a	RM10-258	Retractable finger - RM modification	universale	10
	610434	RM10-233	Retractable finger	DOM.48/58	10
	648068	RM10-147	Retractable finger	MEGA/COMM/DOM/LEX	10
	651324	RM10-102	Retractable finger		10
	676143	RM10-079	Retractable finger	DOM.68/76	10
10	237519	RM10-570	Nut	648068	50
11	645830	RM10-626	T bushing		1
	670199	RM10-093	T bushing	MEGA/COMM/DOM/LEX	10
	670481	RM10-080	T bushing	DOM.68/76	10
	670481/a	RM10-260	T bushing - RM modification	universale	10
	670481/b	RM10-259	Pivot	universale	1
12	008543	RM10-353	Bushing	MEGA/COMM/DOM/MED/LEX/JAG	1
13	676167	RM10-354	Drum	DOM.76/86/96/106	1
14	636341	RM10-300	Bearing		1

CLAAS

Aspo - *Reel Tines*

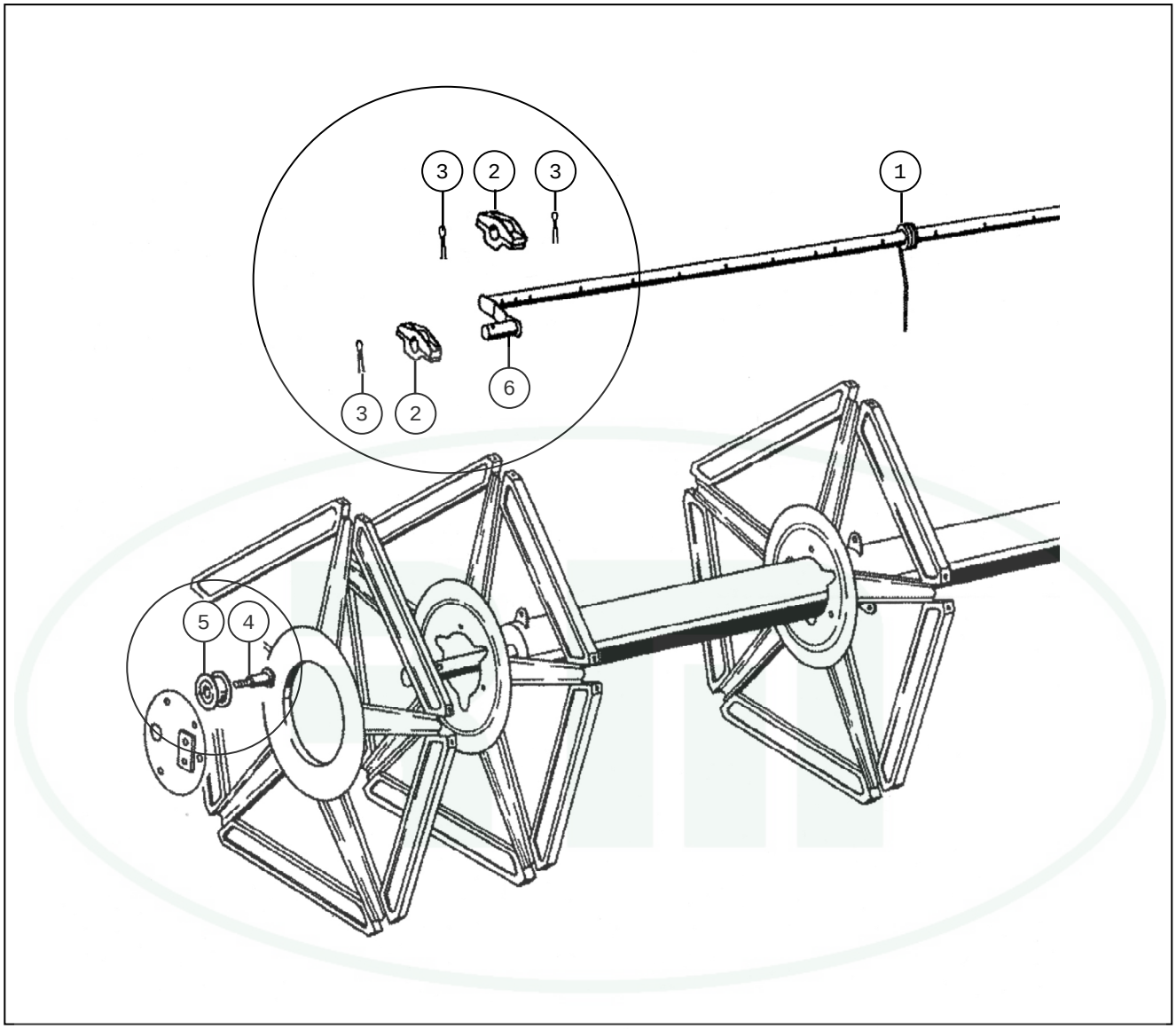

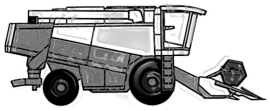

CLAAS

Pos.	Codice Originale	Codice RIMA	Descrizione Description	Applicazione Application	Conf. Pack.
			ASPO *Reel Tines*		
00	677883	RM10-588	Support	MEGA/DOMINATOR	1
01	626987	RM10-355	Reel tine	LEXION	20
	650500	RM10-356	Reel tine	MEGA/COMM/MED	20
	690309	RM10-117	Reel tine	MEGA/COMM/DOM/MED	20
	800021	RM10-357	Reel tine	DOMINATOR	20
02	609965	RM10-097	Support kit	DOM.38/86/96/106	10
03	235091	RM10-358	Pin	MEGA/COMM/DOM/MED/LEX/JAG	1
	235097	RM10-359	Pin	MEGA/COMM/DOM/MED/LEX/JAG	1
04	609934	RM10-360	Pivot	MEGA/COMM/DOM/MED/LEX	1
05	609935	RM10-361	Roller	MEGA/COMM/DOM/MED/LEX	1

CLAAS

Guide Alimentazione – *Conveyor Guides*

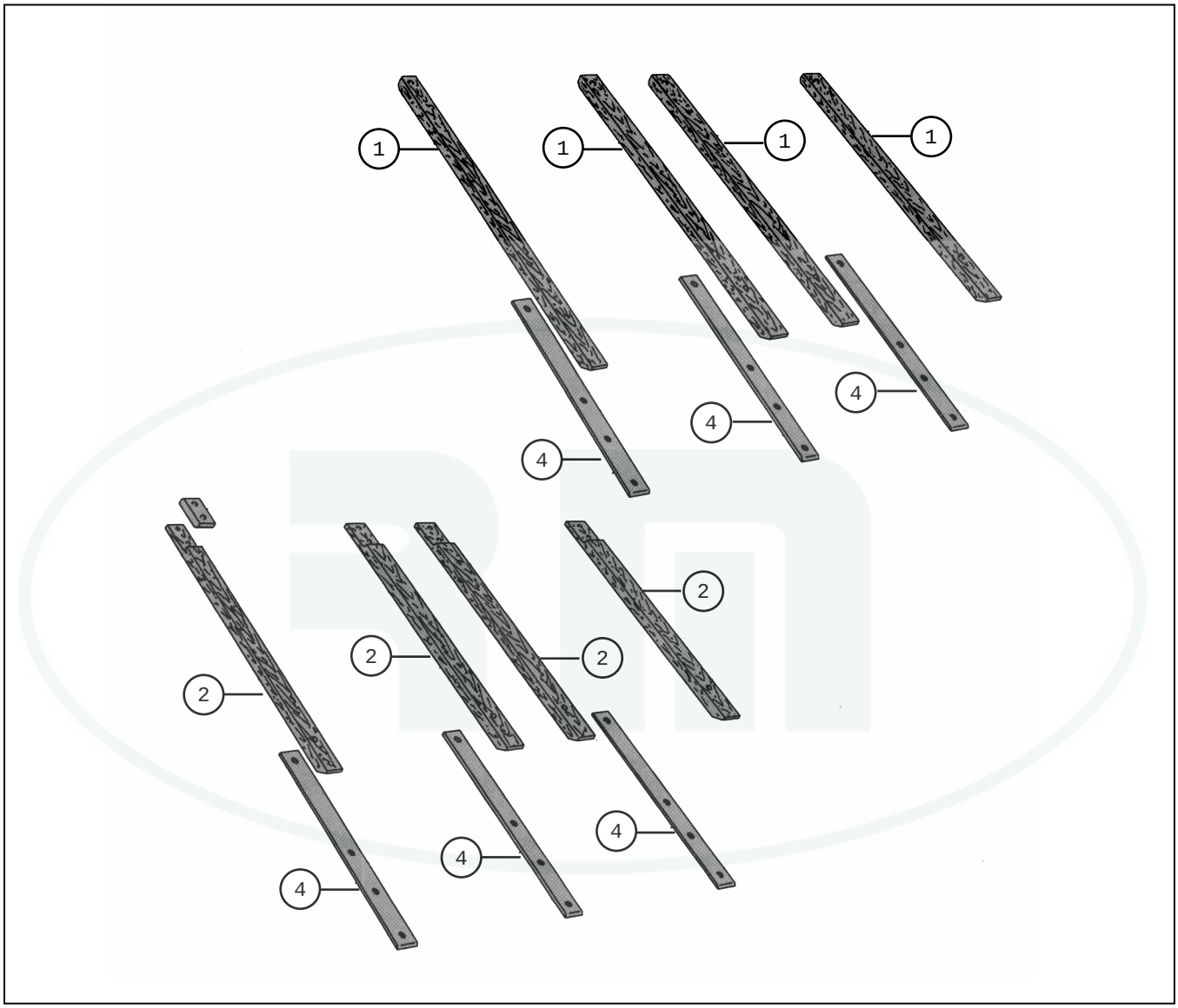

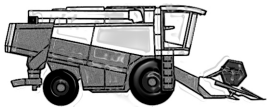

CLAAS

Pos.	Codice Originale	Codice RIMA	Descrizione Description	Applicazione Application	Conf. Pack.
			GUIDE ALIMENTAZIONE *Conveyor Guides*		
01	615891	RM10-421	Wooden guide	DOM/MED/MEGA	1
	630409	RM10-422	Wooden guide	LEXION	1
	645098	RM10-423	Wooden guide	DOM/COMM/MEGA	1
	650867	RM10-424	Wooden guide	DOM/COMM/MEGA	1
02	650686	RM10-601	Plastic guide		1
	680103	RM10-425	Chain guide	DOMINATOR	1
04	603612	RM10-427	Plastic guide	DOM/COMM/MEGA	1
	630570	RM10-428	Plastic guide	DOM/COMM/MED/MEGA	1
	680576	RM10-429	Plastic guide	DOM/COMM/MEGA	1

CLAAS

Alimentazione - *Feeder Channel*

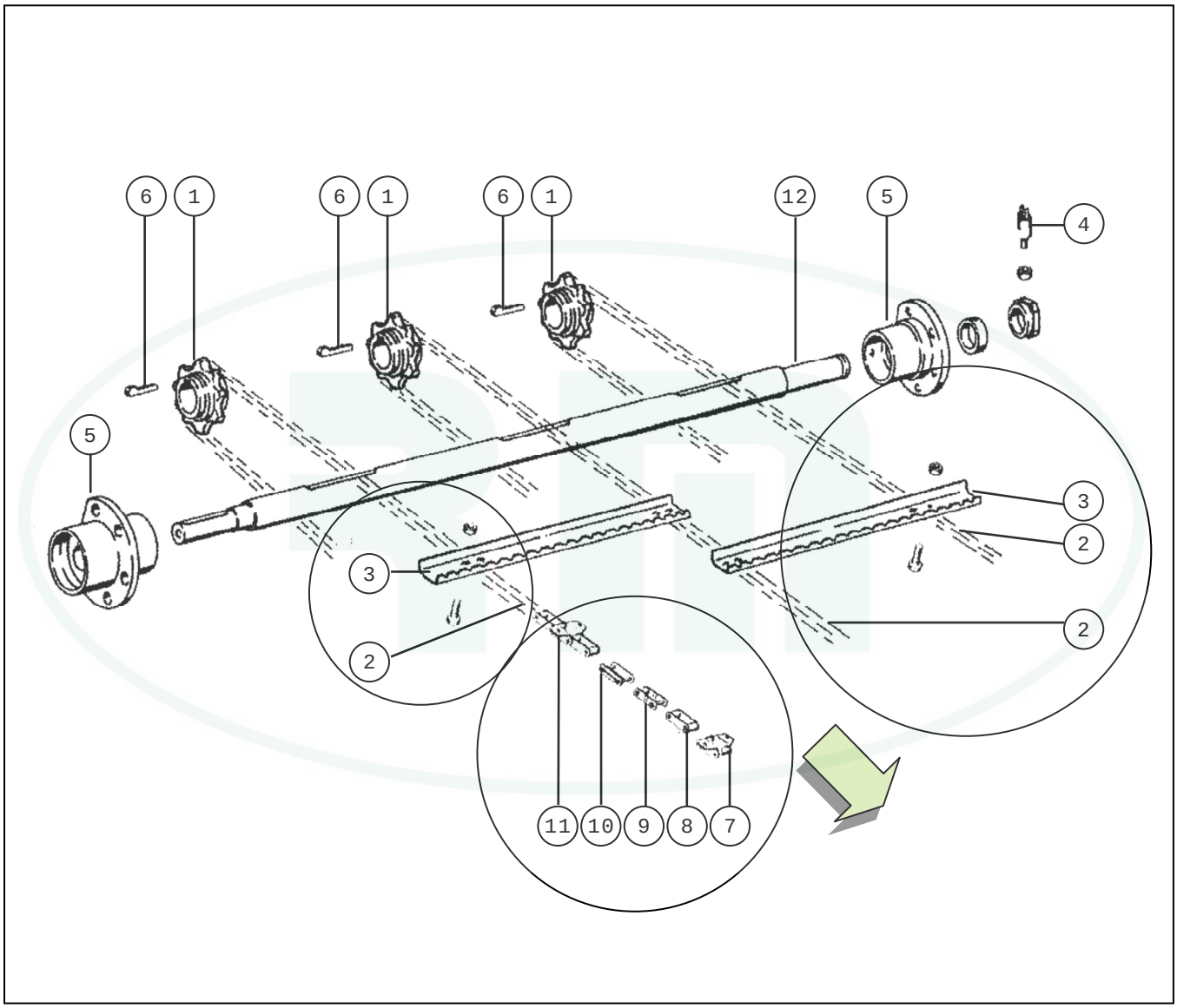

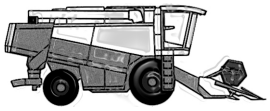

CLAAS

Pos.	Codice Originale	Codice RIMA	Descrizione Description	Applicazione Application	Conf. Pack.
			ALIMENTAZIONE *Feeder Channel*		
01	603507	RM10-362	Sprocket		1
	603508	RM10-363	Sprocket		1
	610199	RM10-364	Sprocket	DOM.38-48-58	1
	630351	RM10-365	Sprocket	LEXION	1
	630635	RM10-366	Sprocket	LEXION	1
	650787	RM10-367	Sprocket	DOM/COMM/MED/MEGA	1
	650869	RM10-368	Sprocket	DOM/MED/MEGA	1
	670489	RM10-369	Sprocket	DOM/COMM/MEGA	1
	680582	RM10-370	Sprocket	DOM/COMM/MEGA	1
02	603614	RM10-371	Feeder chain - assemblied	DOM.76	1
	603688	RM10-372	Feeder chain - assemblied		1
	603689	RM10-373	Feeder chain - assemblied		1
	603750	RM10-374	Feeder chain	DOMINATOR	1
	605169	RM10-375	Feeder chain		1
	614854	RM10-376	Feeder chain - assemblied		1
	614895	RM10-377	Feeder chain	DOM/MEGA	1
	615904	RM10-378	Feeder chain - assemblied	MEGA 208-218	1
	630567	RM10-379	Feeder chain	MEGA/LEXION	1
	630643	RM10-380	Feeder chain	MEGA/LEXION	1
	650783	RM10-381	Feeder chain - assemblied	DOM/COMM/MEGA	1
	650843	RM10-382	Feeder chain	DOM/COMM/MEGA	1
	650886	RM10-383	Feeder chain	DOM.68-78-88-98	1
	676597	RM10-384	Feeder chain	DOM/COMM	1
	680107	RM10-385	Feeder chain	DOMINATOR	1
	680113	RM10-386	Feeder chain	DOM.86-96-88-98	1
	680117	RM10-387	Feeder chain - assemblied	DOM.68-76-78	1
	680486	RM10-388	Feeder chain	MAIS	1
03	603506	RM10-389	Chain lath		1
	603679	RM10-390	Chain lath		1
	603681	RM10-391	Chain lath		1
	603742	RM10-392	Chain lath	DOM.86/96/88/98	1
	603743	RM10-393	Chain lath	DOM.86/96/88/98	1
	610155	RM10-394	Chain lath	MERCATOR	1
	630565	RM10-395	Chain lath	LEXION	1
	630566	RM10-396	Chain lath	LEXION	1
	630642	RM10-397	Chain lath	LEXION	1
	645144	RM10-398	Chain lath	DOM/COMM/MEGA	1
	650713	RM10-399	Chain lath	DOM/COMM/MED/MEGA	1

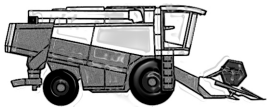

CLAAS

Pos.	Codice Originale	Codice RIMA	Descrizione Description	Applicazione Application	Conf. Pack.
03	650863	RM10-400	Chain lath	DOM/MEGA	1
	650864	RM10-401	Chain lath	DOM/MEGA	1
	680482	RM10-402	Chain lath	MAIS	1
	680483	RM10-403	Chain lath	MAIS	1
	680488	RM10-404	Chain lath	MAIS	1
	680490	RM10-405	Chain lath	MAIS	1
	778711	RM10-406	Chain lath	DOM.48-58	1
04	676835	RM10-407	Sender unit		1
05	603502	RM10-408	Support unit		1
	645007	RM10-409	Support unit		1
	680660	RM10-410	Support unit	DOM/COMM/MEGA	1
06	244810	RM10-411	Key		1
07	680493	RM10-412	Chain link		1
	680494	RM10-413	Chain link		1
08	002866	RM10-414	Chain link		1
09	002861	RM10-416	Chain link		1
	680584	RM10-415	Chain link		1
10	002860	RM10-417	Chain link		1
11	680519	RM10-418	Chain link		1
12	603525	RM10-419	Conveyor shaft		1
	603661	RM10-420	Conveyor shaft		1

Notes

CLAAS

Controbattitore - *Treshing Concave*

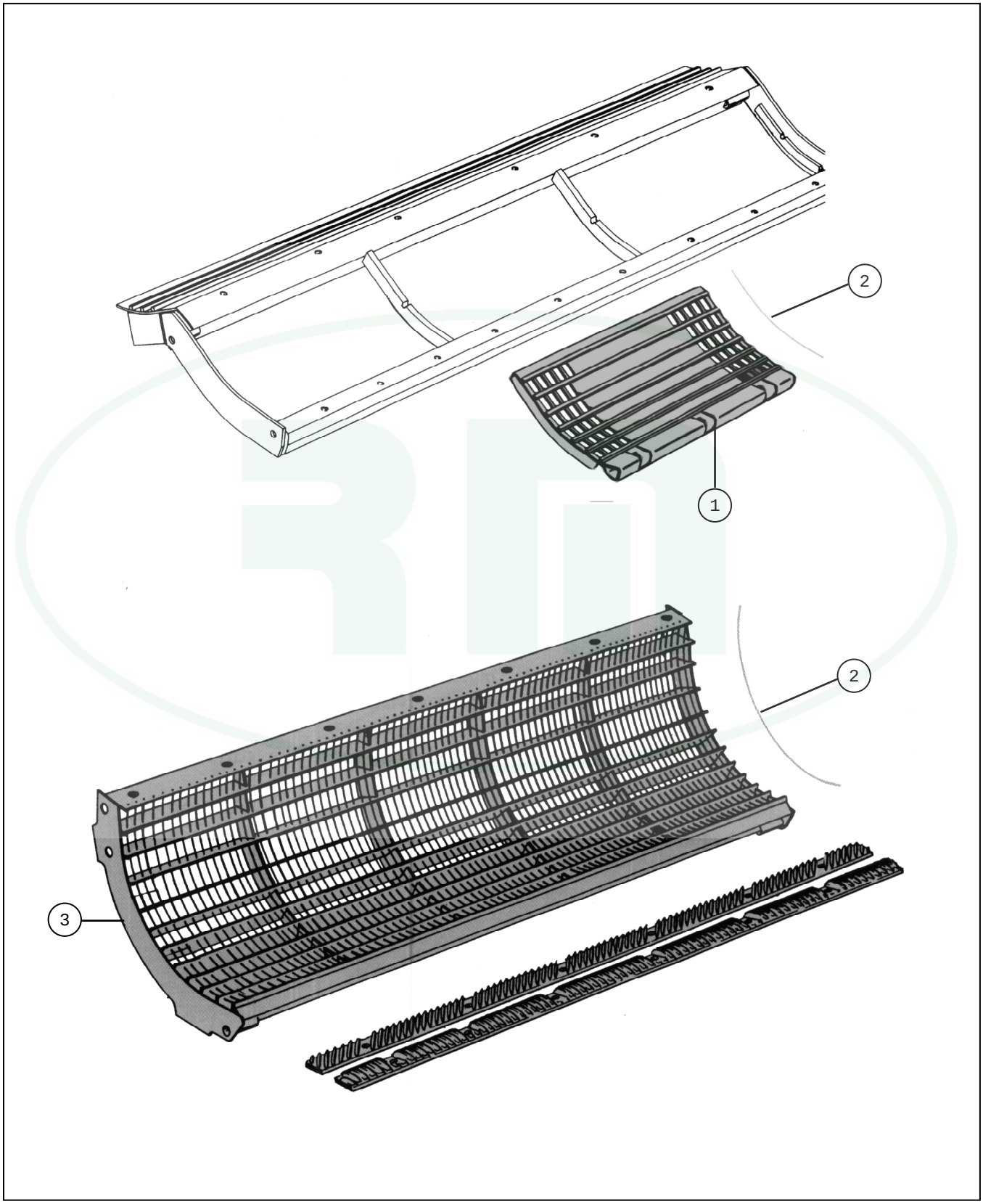

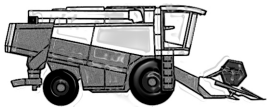

CLAAS

Pos.	Codice Originale	Codice RIMA	Descrizione Description	Applicazione Application	Conf. Pack.
			CONTROBATTITORE *Treshing Concave*		
01	662808	RM10-430	Concave	DOM/MED - grano	1
	662811	RM10-431	Concave	DOM/MED - mais	1
	662817	RM10-432	Concave	DOM/MED - mais	1
	662927	RM10-433	Concave	MEGA 208-218 - grano	1
	756070	RM10-434	Concave	DOM/MED - 663999	1
	756178	RM10-435	Concave	LEXION 430-405 filo	1
	756195	RM10-436	Concave	LEXION 460-440 filo	1
02	617050	RM10-437	Wire	DOM.108-86	1
	682898	RM10-438	Wire	DOM.108-86	1
	756086	RM10-439	Wire	LEXION 460-405	1
	756194	RM10-440	Wire	LEXION 460-405	1
03	601750	RM10-441	Concave	DOM.68-76-78	1
	601751	RM10-442	Concave	DOM.68-76-78	1
	601753	RM10-443	Concave	DOM. 106-108	1
	601755	RM10-444	Concave	DOM.86-88-96-98	1
	617714	RM10-445	Concave	DOM.48-68-78 = 601750	1
	617723	RM10-446	Concave	COMM.228/116CS - 642600	1
	647458	RM10-447	Concave	DOM.98-86	1
	647483	RM10-448	Concave	DOM.118-108-106	1
	663341	RM10-449	Concave	MEGA 204-202 grano	1
	663345	RM10-450	Concave	MEGA 204-202 mais	1
	663941	RM10-451	Concave	MEGA 208-218 - 662902	1
	663946	RM10-452	Concave	MEGA 204-202	1
	663970	RM10-453	Concave	MEGA 208-218 - grano	1
	664140	RM10-454	Concave	MEGA 204-202 grano	1
	682892	RM10-455	Concave	DOM.98-86	1
	682897	RM10-456	Concave	DOM.118-108-106	1
	735550	RM10-457	Concave	LEXION 460-440	1
	756080	RM10-458	Concave	LEXION 460-440 filo	1
	756184	RM10-459	Concave	LEXION 430-405 filo	1

CLAAS

Battitore – *Treshing Device*

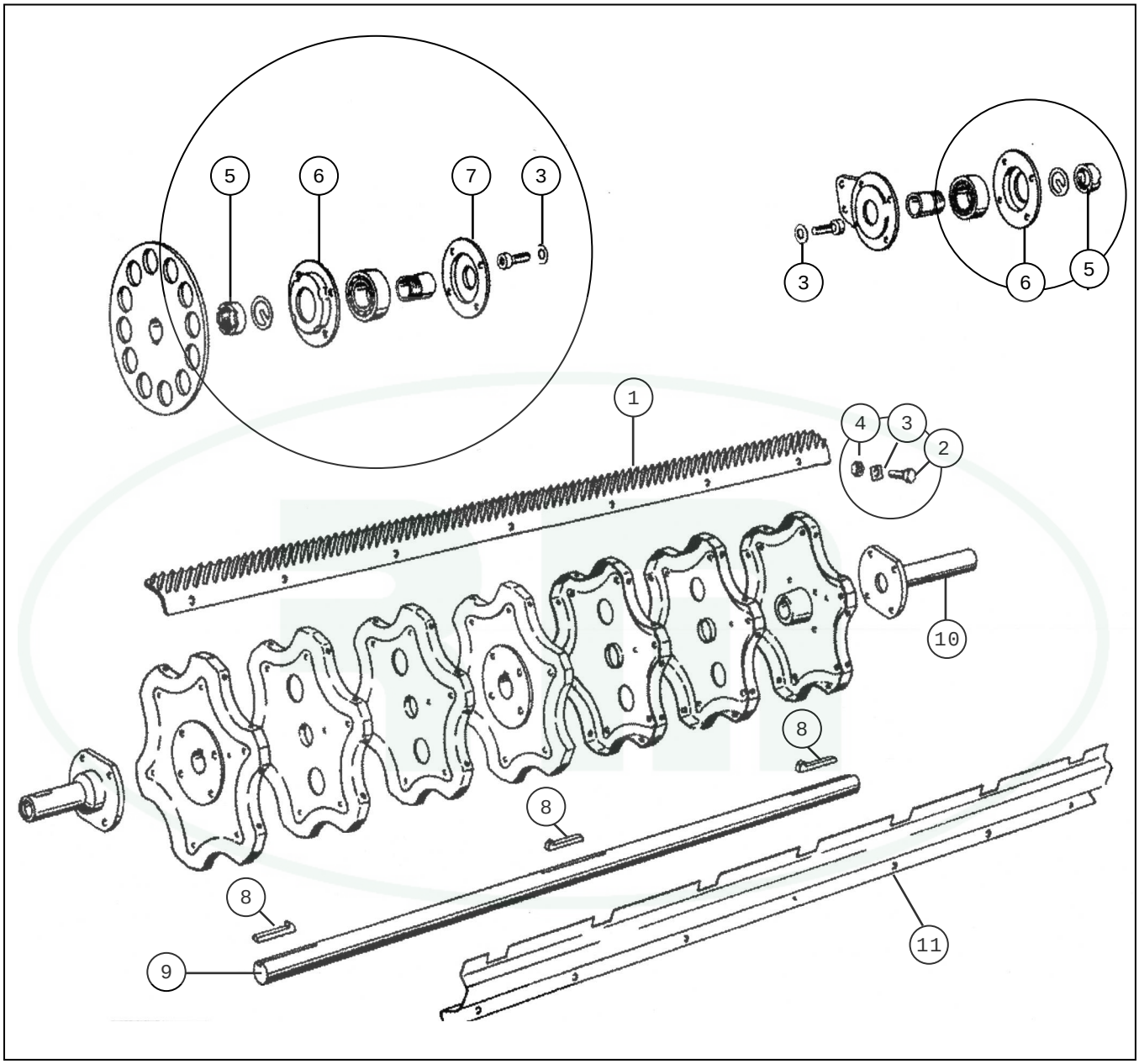

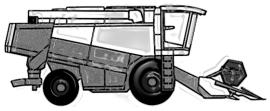

CLAAS

Pos.	Codice Originale	Codice RIMA	Descrizione Description	Applicazione Application	Conf. Pack.
			BATTITORE *Treshing Device*		
01	176188	RM10-158	Rasp bar set	MERCATOR - 653266/7	1
	176189	RM10-073	Rasp bar set	DOM.100-105 1565mm - 678073/4	1
	176190	RM10-074	Rasp bar set	DOM.80-85 1305mm - 678424/5	1
	177531	RM10-070	Rasp bar set	DOM.48-68-76-78 - 600031/2	1
	177532	RM10-071	Rasp bar set	DOM/COMM/MED 1320mm 678401/2	1
	177533	RM10-072	Rasp bar set	DOM/COMM/MED 1580mm - 678403/4	1
	181741	RM10-500	Rasp bar set	LEXION 430-405 1420mm	1
	181742	RM10-237	Rasp bar set	LEXION 430-405 1420mm	1
	181743	RM10-501	Rasp bar set	LEXION 480-440 1700mm	1
	181744	RM10-238	Rasp bar set	LEXION 480-440 1700mm	1
	702574	RM10-502	Rasp bar set	CONSUL-MERCUR	1
	702575	RM10-241	Rasp bar set	CONSUL-MERCUR	1
02	237461	RM10-249	Screw	233456	50
03	239389	RM10-279	Washer		1
	653268	RM10-282	Washer		1
04	238234	RM10-283	Nut	233323	50
05	610359	RM10-284	Support		1
06	676686	RM10-285	Flange		1
	687307	RM10-286	Flange	DOM/COMM/MED/MEGA/LEX	1
07	673685	RM10-287	Housing		1
08	007633	RM10-288	Key		1
09	600415	RM10-289	Shaft		1
10	600410	RM10-294	Pivot		1
	600420	RM10-292	Pivot		1
11	662883	RM10-295	Cover	DOM/MED/MEGA	1
	662886	RM10-296	Cover	DOM/MED/MEGA	1
12	239004	RM10-038	Nut		50
	628050	RM10-062	Spike tooth	RISO	1

CLAAS

Scuotipaglia – *Straw Walker*

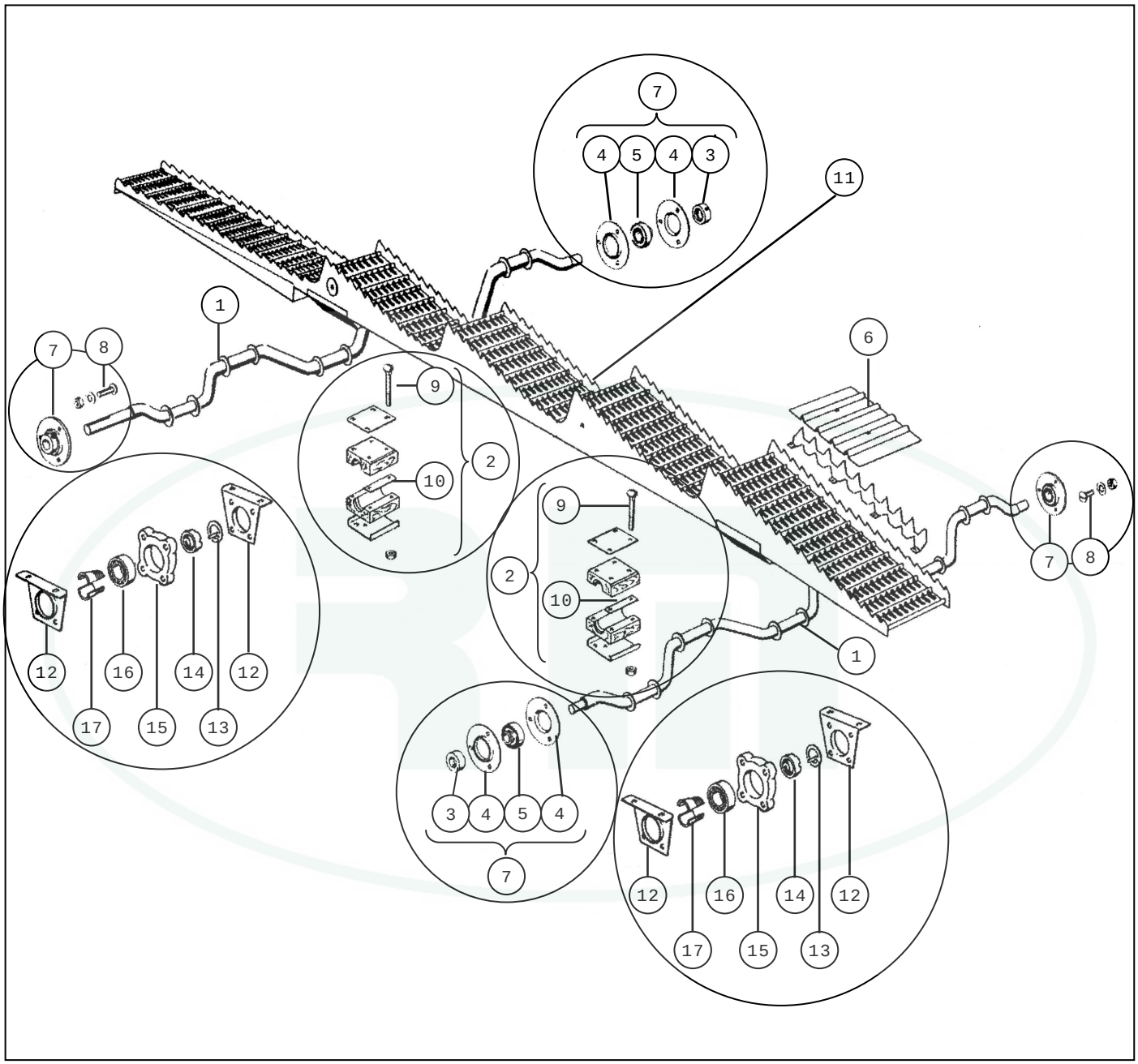

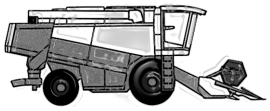

CLAAS

Pos.	Codice Originale	Codice RIMA	Descrizione Description	Applicazione Application	Conf. Pack.
			SCUOTIPAGLIA *Straw Walker*		
01	176968	RM10-091	Crankshaft	DOM/MED/MEGA - 678500	1
	600042	RM10-083	Crankshaft	DOM.68-76-78	1
	600091	RM10-084	Crankshaft	DOM.68-76-78	1
	605668	RM10-086	Crankshaft	DOM/MED/MEGA	1
	618176	RM10-087	Crankshaft	MERCATOR	1
	618178	RM10-088	Crankshaft	MERCATOR	1
	670945	RM10-089	Crankshaft	DOM/MED/MEGA	1
	678513	RM10-092	Crankshaft	DOM/MED/MEGA	1
	684021	RM10-090	Crankshaft	DOM/MEGA	1
	703856	RM10-115	Crankshaft	DOM.68-76-78	1
	703859	RM10-122	Crankshaft	CONSUL	1
02	504075	RM10-460	Wooden bearing		1
	504076	RM10-461	Wooden bearing		1
	618083	RM10-125	Wooden bearing		1
	618186	RM10-126	Wooden bearing	DOM.68-76-78 - 618181	1
	618254	RM10-127	Wooden bearing	DOM/MED/MEGA - 703861	1
	678258	RM10-129	Wooden bearing	DOM/MED/MEGA	1
	678522	RM10-130	Wooden bearing	DOM/MED/MEGA	1
	703827	RM10-133	Wooden bearing		1
	773360	RM10-138	Wooden bearing		1
03	560213	RM10-627	Ring		1
	610447	RM10-462	Ring	DOM/COMM/MED/MEGA/LEX/JAG	1
	616067	RM10-628	Ring		1
	619287	RM10-629	Ring		1
04	560214	RM10-630	Ring		1
	610446	RM10-463	Ring	DOM/COMM/MED/MEGA/LEX/JAG	1
	616068	RM10-596	Flange		1
	619288	RM10-631	Ring		1
05	560212	RM10-590	Bearing		1
	610448	RM10-464	Bearing	DOM/COMM/MED/MEGA/LEX/JAG	1
	616066	RM10-595	Bearing		1
	619286	RM10-598	Bearing		1
06	605932	RM10-465	Cover	DOM/MED/MEGA	1
07	560210	RM10-589	Bearing		1
	610449	RM10-466	Cpl. Bearing	DOM/COMM/MED/MEGA/LEX/JAG	1
	616065	RM10-594	Bearing		1
	619285	RM10-597	Bearing		1

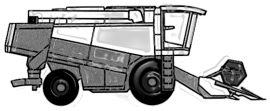

CLAAS

Pos.	Codice Originale	Codice RIMA	Descrizione Description	Applicazione Application	Conf. Pack.
08	502511	RM10-467	Bolt	DOM/COMM/MED/MEGA/LEX/JAG	1
09	237561	RM10-468	Bolt	DOM/MED/MEGA	1
	237810	RM10-469	Bolt		1
10	670949	RM10-470	Thick	DOM/MED/MEGA	1
	678521	RM10-471	Thick	DOM/MED/MEGA	1
11	678282	RM10-472	Straw walker	DOMINATOR	1
	678651	RM10-473	Straw walker	DOM/MED/MEGA	1
12	726980	RM10-474	Flange	DOM/MED/MEGA/LEX	1
13	734958	RM10-475	Ring	DOM/MED/MEGA/LEX	1
	752138	RM10-476	Ring	DOM/COMM/MED/MEGA/LEX/JAG	1
14	734959	RM10-565	Nut	DOM/MED/MEGA/LEX	1
	752212	RM10-568	Nut	DOM/COMM/MED/MEGA/LEX/JAG	1
15	726981	RM10-564	Ring	DOM/MED/MEGA	1
16	237833	RM10-563	Bearing	DOM/MED/MEGA	1
17	735013	RM10-566	Pin	DOM/MED/MEGA	1
	735036	RM10-567	Pin	DOM/MED/MEGA	1

Notes

CLAAS
Crivelli – *Sieves*

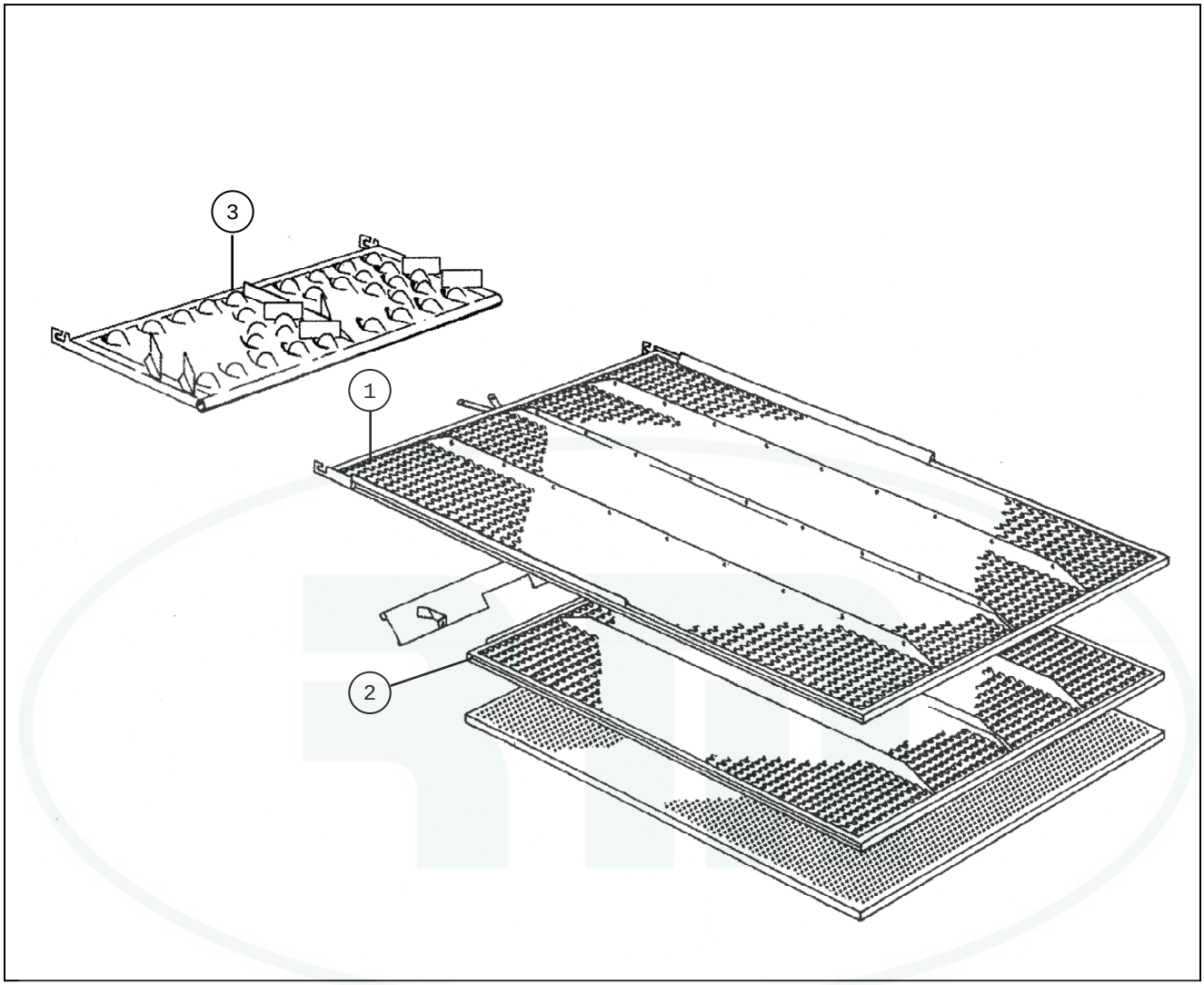

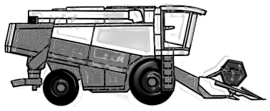

CLAAS

Pos.	Codice Originale	Codice RIMA	Descrizione Description	Applicazione Application	Conf. Pack.
			CRIVELLI *Sieves*		
01	600112	RM10-174	Upper sieve	DOM. 76-78 1275x1010	1
	600115	RM10-176	Upper sieve	DOM. 86-96 1275x632	1
	600118	RM10-177	Upper sieve	DOM/COM/MEGA 1739x760	1
	647127	RM10-178	Upper sieve	DOM/COM/MEGA 1739x694	1
	647663	RM10-179	Upper sieve	DOM. 78 1739x910	1
	673903	RM10-181	Upper sieve	DOM. 85	1
	678000	RM10-182	Upper sieve	DOM. 105	1
	678001	RM10-183	Upper sieve	DOM. 105	1
	678002	RM10-184	Upper sieve	DOM. 105	1
	725140	RM10-187	Upper sieve	DOM. 48-58-68 1130x1010	1
02	600111	RM10-173	Lower sieve	DOM. 76-78 1275x1010	1
	600114	RM10-175	Lower sieve	DOM. 86-96 1275x632	1
	600117	RM10-185	Lower sieve	DOM/COM/MEGA 1275x760	1
	673901	RM10-180	Lower sieve	DOM. 85	1
	725139	RM10-186	Lower sieve	DOM. 48-58-68 1443x1010	1
03	673905	RM10-188	Extension	DOM. 85	1
	673909	RM10-189	Extension	DOM. 80	1
	725242	RM10-190	Extension	DOM. 48-58-68 333x978	1

CLAAS

Elevatore – *Grain Elevator*

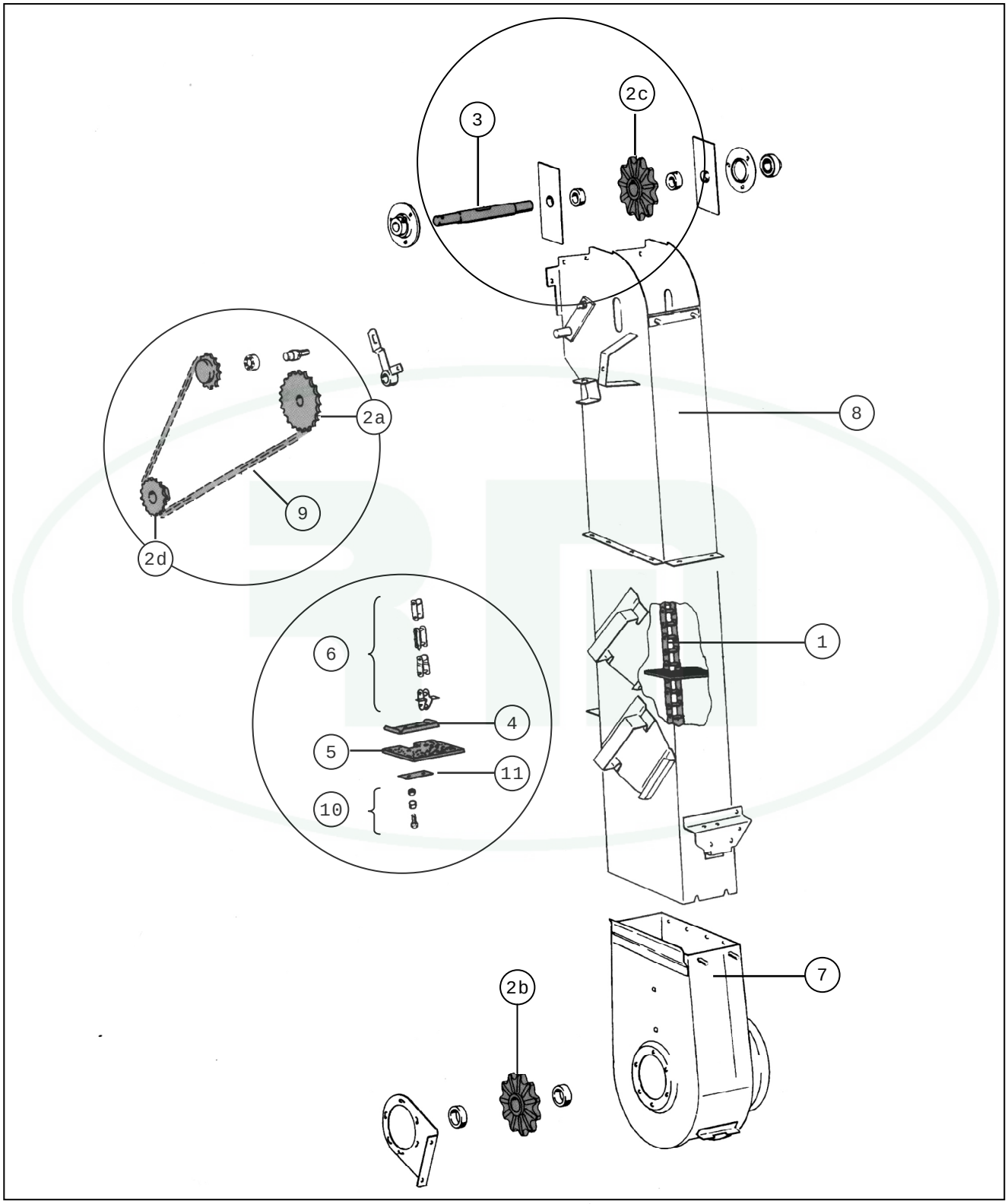

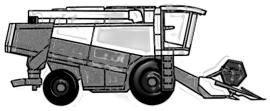

CLAAS

Pos.	Codice Originale	Codice RIMA	Descrizione Description	Applicazione Application	Conf. Pack.
			ELEVATORE *Elevator*		
01	605193	RM10-477	Elevator chain		1
	605456	RM10-478	Elevator chain	DOM/MEGA	1
	607906	RM10-479	Elevator chain	DOM/MEGA	1
	618600	RM10-480	Elevator chain	MEGA	1
	642723	RM10-481	Elevator chain	COMMANDOR	1
	654318	RM10-482	Elevator chain	DOM.38-48-68	1
	662716	RM10-483	Elevator chain	MEGA 203-204	1
	678448	RM10-484	Elevator chain	DOM/MED/COMM	1
	682747	RM10-485	Elevator chain		1
	682757	RM10-486	Elevator chain	MEGA 208-218	1
	682796	RM10-487	Elevator chain	DOM/MEGA	1
	725476	RM10-488	Elevator chain	DOM.48-58-68	1
	727839	RM10-489	Elevator chain	DOM.68	1
	735367	RM10-490	Elevator chain	LEXION	1
	735916	RM10-491	Elevator chain	LEXION	1
02a	600967	RM10-492	Sprocket	DOM/COMM/MED/MEGA	1
	748596	RM10-505	Sprocket	LEXION	1
	754316	RM10-506	Sprocket	LEXION	1
02b	674143	RM10-493	Sprocket	DOM/COMM/MED/MEGA/LEX	1
	674406	RM10-494	Sprocket	DOM/COMM/MED/MEGA	1
	735895	RM10-497	Sprocket	LEXION	1
02c	678856	RM10-495	Sprocket	DOM/COMM/MED/MEGA/LEX	1
	735896	RM10-498	Sprocket	LEXION	1
02d	735355	RM10-496	Sprocket	LEXION	1
	735949	RM10-499	Sprocket	LEXION	1
	748595	RM10-569	Sprocket	LEXION	1
03	600641	RM10-507	Shaft	DOM/COMM/MED/MEGA	1
	605127	RM10-508	Shaft	DOM/COMM/MED/MEGA/LEX	1
	735331	RM10-509	Shaft	LEXION	1
04	605449	RM10-510	Plate	DOM/MED/MEGA	1
	636208	RM10-511	Plate	DOM/COMM/MED/MEGA/LEX	1
	642658	RM10-512	Plate	COMM/MEGA	1
	672631	RM10-513	Plate	DOM/MEGA	1
	676770	RM10-514	Plate	DOM/COMM/MED/MEGA/LEX	1
05	605450	RM10-157	Rubber paddle	DOM/MED/MEGA	10
	619298	RM10-063	Rubber paddle	DOM/COMM/MED/MEGA/LEX	10
	642644	RM10-064	Rubber paddle	COMM/MEGA	10

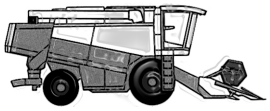

CLAAS

Pos.	Codice Originale	Codice RIMA	Descrizione Description	Applicazione Application	Conf. Pack.
05	672630	RM10-059	Rubber paddle	DOM/MEGA	10
	735935	RM10-236	Rubber paddle	LEXION	10
06	002860	RM10-417	Chain link	DOM/COMM/MED/MEGA/LEX	1
	002861	RM10-416	Chain link	DOM/COMM/MED/MEGA/LEX	1
	002866	RM10-414	Chain link	DOM/COMM/MED/MEGA/LEX	1
	680493	RM10-412	Chain link	DOM/COMM/MED/MEGA/LEX	1
	680494	RM10-413	Chain link	DOM/COMM/MED/MEGA/LEX	1
	680584	RM10-415	Chain link	DOM/COMM/MED/MEGA/LEX	1
07	600380	RM10-521	Elevator bottom	DOM.76-86-96-106	1
	605424	RM10-522	Elevator bottom	DOM. 106	1
08	600874	RM10-523	Elevator	DOM.76-86-96-106	1
	605433	RM10-524	Elevator	DOM. 106	1
	687337	RM10-525	Elevator	DOM/MEGA	1
09	608716	RM10-526	Roller chain	DOM/MEGA/MED	1
	608745	RM10-527	Roller chain	DOM/MEGA/MED	1

Notes

CLAAS

Trinciapaglia - *Straw Chopper*

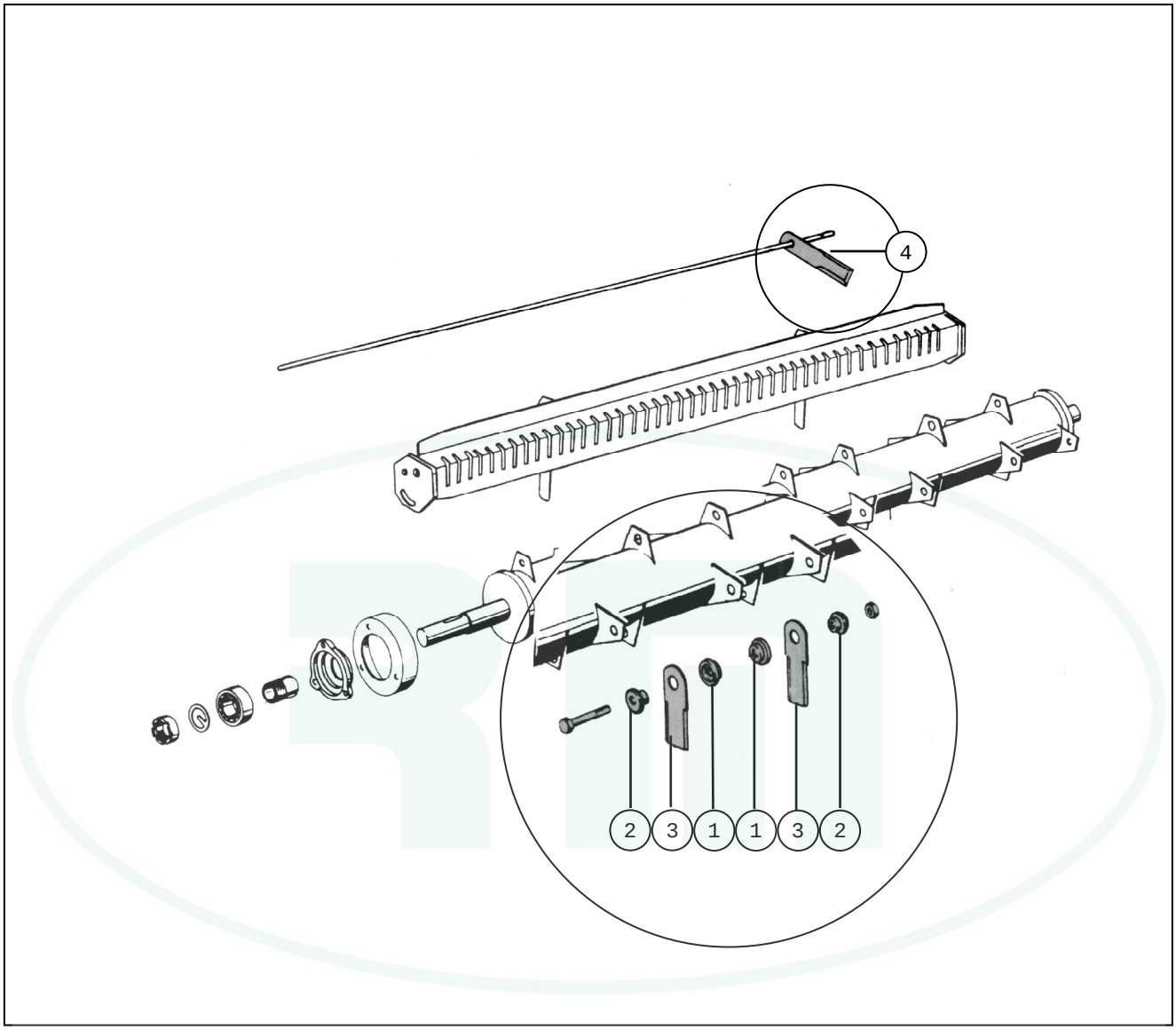

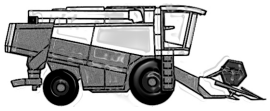

CLAAS

Pos.	Codice Originale	Codice RIMA	Descrizione Description	Applicazione Application	Conf. Pack.
			TRINCIAPAGLIA *Straw Chopper*		
01	060015	RM39-292	Inner bushing		50
	736871	RM39-075	Inner bushing		50
02	060016	RM39-041	Inner bushing		50
03	060017	RM39-002	Straw chopper blade		20
	065294	RM39-063	Straw chopper blade		20
	065642	RM39-064	Straw chopper blade		20
	736872	RM39-062	Straw chopper blade		20
	755784	RM39-006	Straw chopper blade		20
	755785	RM39-072	Straw chopper blade		20
	755786	RM39-073	Straw chopper blade		20
	755787	RM39-071	Straw chopper blade		20
	755874	RM39-550	Straw chopper blade		20
	755875	RM39-083	Straw chopper blade		20
04	060030	RM39-013	Counterknife		20
	736870	RM39-042	Outer bushing		50

CLAAS

Lanciatore – *Impeller Plates*

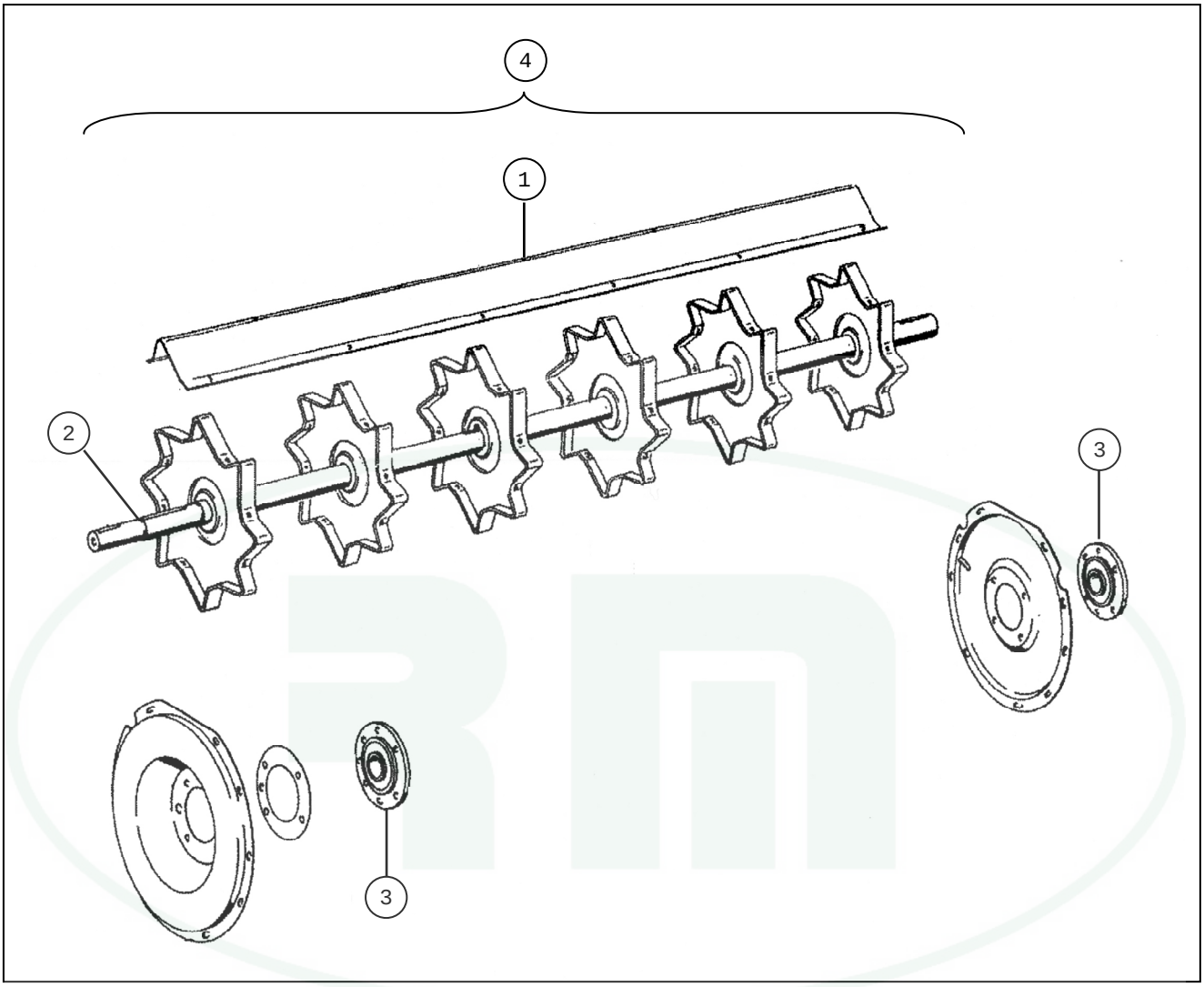

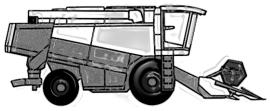

CLAAS

Pos.	Codice Originale	Codice RIMA	Descrizione Description	Applicazione Application	Conf. Pack.
			LANCIATORE *Impeller Plates*		
01	608548	RM10-599	Impeller blade		1
	608549	RM10-191	Impeller blade	DOM/MED/MEGA	1
	617227	RM10-192	Impeller blade	MERCATOR	1
	634981	RM10-193	Impeller blade	DOM/MED/MEGA	1
	674481	RM10-194	Impeller blade	DOMINATOR	1
	684294	RM10-195	Impeller blade		1
	684739	RM10-196	Impeller blade		1
	734291	RM10-197	Impeller blade	LEXION 460-440	1
	735617	RM10-198	Impeller blade	LEXION 430-405	1
02	629692	RM10-199	Shaft	DOM.108-118	1
03	687301	RM10-245	Support unit	DOM.108-118	1
	687302	RM10-246	Support unit	DOM.108-118	1
04	663451	RM10-247	Drum cover	DOM/MED/MEGA	1
	664172	RM10-248	Drum cover	DOM/MED/MEGA	1

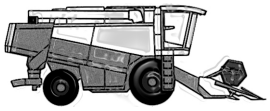

CLAAS

Pos.	Codice Originale	Codice RIMA	Descrizione Description	Applicazione Application	Conf. Pack.
			VARIE *Various*		
	177040	RM10-291	Ball joint		1
	177041	RM10-140	Ball joint	685576	1
	177042	RM10-055	Ball joint	633584	1
	570591	RM10-137	Ball joint	SP122	1
	605244	RM10-591	Support		1
	610330	RM10-504	Lining		1
	619342	RM10-118	Rubber bearing		10
	619510	RM10-121	Lining		1
	648507	RM10-600	Lining		1
	655021	RM10-066	Cluitch disc		1
	655043	RM10-067	Cluitch disc	317000	1
	656112	RM10-058	Ball joint		1
	656113	RM10-057	Ball joint		1
	663157	RM10-602	Support		1
	679994	RM10-068	Cluitch disc	317200	1
	679996	RM10-069	Cluitch disc	317100	1
	688465	RM10-065	Ball joint		1

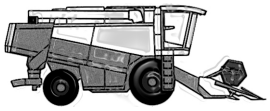

CLAAS

Pos.	Codice Originale	Codice RIMA	Descrizione Description	Applicazione Application	Conf. Pack.
			CINGHIE *Belts*		
	052393.1		**BELT**	JAG 840 / 820	**1**
	056961.0		**BELT**	DOM 56 / 66-68-76-MED 330 / 3	**1**
	060064.0		**BELT**	36 CHARS	**1**
	060162.0		**BELT**		**1**
	060306.0		**BELT**	DOM 100 / 105-108 / 118 HYD-108 / 1	**1**
	060306.2		**BELT**	DOM 106-204 / 203 MEG-218 / 208 MEG	**1**
	060306.3		**BELT**	DOM 108 VX-88 VX-98 VX	**1**
	060360.3		**BELT**		**1**
	060949.0		**BELT**	DOM 80 / 85	**1**
	060949.1		**BELT**		**1**
	061024.0		**BELT**		**1**
	061146.0		**BELT**		**1**
	061213.0		**BELT**	DOM 88 VX	**1**
	061214.0		**BELT**	DOM 108 / 118 HYD-108 / 118 MECH-10	**1**
	061252.0		**BELT**		**1**
	061253.0		**BELT**	DOM 100 / 105	**1**
	061253.1		**BELT**		**1**
	061306.2		**BELT**	DOM 96	**1**
	061353.0		**BELT**	DOM 108 / 118 HYD-108 / 118 MEC-21	**1**
	061353.1		**BELT**	DOM 108 VX-MED 330 / 320 / 310	**1**
	061360.0		**BELT**	DOM 106-108 / 118 HYD-108 / 118 MEC	**1**
	061361.0		**BELT**	DOM 56 / 66-86-88 VX	**1**
	061700.0		**BELT**	COMM 114-115-116 / 228-DOM	**1**
	061700.1		**BELT**	LEX 460 / 440-480	**1**
	061701.1		**BELT**	COMM 114-115-116 / 228-DOM	**1**
	061701.2		**BELT**		**1**
	061872.0		**BELT**	COMM 114-115-116 / 228-DOM	**1**
	061878.0		**BELT**	DOM 48	**1**
	061902.0		**BELT**	DOM 58-68	**1**
	062043.0		**BELT**	DOM 68	**1**
	062294.0		**BELT**	JAG 70 SF	**1**
	063285.0		**BELT**	JAG 70 SF	**1**
	063309.0		**BELT**	JAG 70 SF	**1**
	063940.0		**BELT**	JAG 70 SF	**1**
	064168.2		**BELT**	COMM 114-115-116 / 228-DOM	**1**
	066034.0		**BELT**	DOM 108 VX-98 VX-MED 330 / 320 /	**1**
	070310.1		**BELT**	JAG 682S/SL-685/690-695/690/685	**1**
	070952.0		**BELT**		**1**
	070952.2		**BELT**	JAG 685 / 690-695 / 690 / 685 SL	**1**

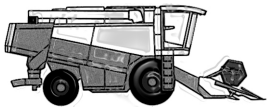

CLAAS

Pos.	Codice Originale	Codice RIMA	Descrizione Description	Applicazione Application	Conf. Pack.
	070953.1		BELT		1
	072110.0		BELT	JAG 685 / 690	1
	073199.0		BELT		1
	073201.0		BELT	JAG 682S / SL	1
	073202.0		BELT	JAG 682S / SL	1
	073202.1		BELT		1
	073203.0		BELT	JAG 682S / SL	1
	073204.0		BELT	JAG 682S / SL-695 / 690 / 685 SL	1
	074202.0		BELT		1
	074771.0		BELT		1
	074771.1		BELT	JAG 695 / 690 / 685 SL	1
	074771.2		BELT		1
	074803.0		BELT		1
	074803.1		BELT	JAG 695 / 690 / 685 SL	1
	074803.2		BELT		1
	076403.1		BELT	JAG 840 / 820	1
	077276.0		BELT	JAG 840 / 820	1
	077400.0		BELT	JAG 840 / 820	1
	077796.0		BELT	JAG 840 / 820	1
	077797.0		BELT	JAG 840 / 820	1
	133523.0		BELT		1
	133528.0		BELT	COMM 116 / 228-DOM 106-JAG 6	1
	133549.0		BELT	DOM 106	1
	133549.1		BELT		1
	133630.0		BELT	COMM 116 / 228-DOM 204 / 203 MEG	1
	133630.1		BELT		1
	133635.0		BELT	DOM 204 / 203 MEG	1
	133635.1		BELT		1
	133640.0		BELT	COMM 116 / 228	1
	133641.0		BELT		1
	133642.0		BELT		1
	145262.0		BELT		1
	145265.0		BELT		1
	146084.0		BELT		1
	147217.0		BELT		1
	147217.1		BELT		1
	147227.0		BELT		1
	147228.1		BELT		1
	147233.1		BELT		1
	176442.1		BELT	LEX 480	1
	176475.0		BELT		1

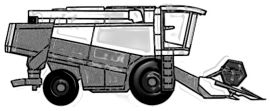

CLAAS

Pos.	Codice Originale	Codice RIMA	Descrizione Description	Applicazione Application	Conf. Pack.
	176542.1		**BELT**		**1**
	176543.0		**BELT**	JAG 685 / 690-695 / 690 / 685 SL	**1**
	211148.1		**BELT**	JAG 60	**1**
	211238.0		**BELT**	JAG 60	**1**
	233829.2		**BELT**		**1**
	233839.2		**BELT**	COMM 116 / 228	**1**
	233843.1		**BELT**	COMM 114-115-DOM 114-115	**1**
	267251.0		**BELT**		**1**
	344014.1		**BELT**	DOM 114-	**1**
	500863.0		**BELT**	MAT / STD / GIG MERCUR	**1**
	501925.0		**BELT**	COMM 116 / 228-DOM 100 / 105-80	**1**
	503939.0		**BELT**		**1**
	503969.0		**BELT**	OLDER MODELS	**1**
	505051.0		**BELT**		**1**
	505143.0		**BELT**	OLDER MODELS	**1**
	506023.0		**BELT**	COLUMBUS OLDER MODELS	**1**
	506671.0		**BELT**	DOM 108 / 118 HYD-108 / 118 MECH-86	**1**
	506880.0		**BELT**	COLUMBUS EUROPA	**1**
	506940.0		**BELT**	COLUMBUS EUROPA	**1**
	507020.0		**BELT**	OLDER MODELS	**1**
	509435.0		**BELT**	DOM 68	**1**
	512087.0		**BELT**	JAG 840 / 820	**1**
	523252.0		**BELT**	MAT / STD / GIG	**1**
	532011.0		**BELT**	DOM 80 / 85	**1**
	532011.1		**BELT**		**1**
	544048.0		**BELT**	DOM 88 VX-98 VX	**1**
	544049.0		**BELT**	DOM 108 VX	**1**
	544147.0		**BELT**	MED 330 / 320 / 310	**1**
	551068.0		**BELT**	MAT / STD / GIG	**1**
	551190.0		**BELT**	MERCUR	**1**
	560562.0		**BELT**	DOM 80 / 85	**1**
	560662.0		**BELT**		**1**
	570195.0		**BELT**		**1**
	570407.0		**BELT**		**1**
	570827.0		**BELT**		**1**
	572150.0		**BELT**		**1**
	573443.0		**BELT**		**1**
	602387.0		**BELT**	JAG 682S / SL	**1**
	602387.1		**BELT**		**1**
	603015.0		**BELT**	DOM 48-58-86	**1**
	603015.1		**BELT**	DOM 112-114-115-116-56 / 66	**1**

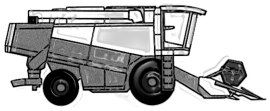

CLAAS

Pos.	Codice Originale	Codice RIMA	Descrizione Description	Applicazione Application	Conf. Pack.
	603017.0		**BELT**	DOM 108 / 118 HYD-86-98	**1**
	603033.0		**BELT**	DOM 106	**1**
	603048.0		**BELT**	DOM 56 / 66-68-76	**1**
	603122.0		**BELT**	DOM 56 / 66-76-86-96	**1**
	603247.0		**BELT**	DOM 48-56 / 66-76-86-96	**1**
	603247.1		**BELT**	COMM 114-115-116 / 228-DOM	**1**
	603283.0		**BELT**	DOM 56 / 66-68-76	**1**
	603284.0		**BELT**	DOM 56 / 66-68-76	**1**
	603290.0		**BELT**	DOM 108 / 118 MECH-68	**1**
	603317.0		**BELT**	DOM 86	**1**
	603336.0		**BELT**	COMM 116 / 228-DOM 106-108 / 11	**1**
	603337.0		**BELT**	COMM 114-115-116 / 228-DOM 1	**1**
	603341.0		**BELT**	DOM 106-108 / 118 HYD-108 / 118 MEC	**1**
	603354.0		**BELT**	DOM 106-108 / 118 HYD	**1**
	603378.0		**BELT**	DOM 106-98	**1**
	603380.0		**BELT**	COMM 114-115-116 / 228-DOM	**1**
	603380.1		**BELT**	DOM 108 VX-204 / 203 MEG-218 / 208	**1**
	603387.0		**BELT**		**1**
	603427.0		**BELT**	DOM 86-	**1**
	603430.0		**BELT**	COMM 116 / 228-DOM 108 / 118 HYD	**1**
	609441.0		**BELT**		**1**
	609762.0		**BELT**	COMM 114-115-116 / 228-DOM	**1**
	609822.0		**BELT**	DOM 108 / 118 MECH-112-98	**1**
	609823.0		**BELT**	DOM 108 / 118 HYD-108 / 118 MECH-10	**1**
	610196.0		**BELT**	MAT / STD / GIG	**1**
	610197.0		**BELT**	MAT / STD / GIG SF	**1**
	610830.0		**BELT**	CONSUL MER 50/60-S70/ 75-PROTECTOR	**1**
	610833.0		**BELT**	MAT / STD / GIG MER 50 / 60-S70	**1**
	610835.0		**BELT**	MAT / STD / GIG	**1**
	617001.0		**BELT**		**1**
	617309.0		**BELT**	MAT / STD / GIG MER 50 / 60-S70	**1**
	618123.0		**BELT**	JAG 70 SF-SF	**1**
	621903.0		**BELT**	DOM 106-56 / 66-76-86-96	**1**
	621903.1		**BELT**	DOM 114-116-MED 330 / 320 / 310	**1**
	623252.0		**BELT**		**1**
	623427.0		**BELT**	DOM 108 / 118 HYD-108 / 118 MECH-98	**1**
	624131.0		**BELT**	COLUMBUS OLDER MODELS SF	**1**
	628630.0		**BELT**	COMM 114-115-116 / 228-DOM	**1**
	629000.1		**BELT**	COMM 114	**1**
	629001.1		**BELT**		**1**
	629002.0		**BELT**	DOM 100 / 105	**1**

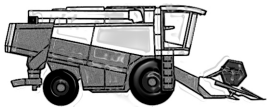

CLAAS

Pos.	Codice Originale	Codice RIMA	Descrizione Description	Applicazione Application	Conf. Pack.
	629002.1		**BELT**	COMM 114-115-116 / 228-DOM	**1**
	629035.0		**BELT**	DOM 100 / 105-106-108 / 118 HYD	**1**
	629036.0		**BELT**	DOM 100 / 105-80 / 85	**1**
	629081.0		**BELT**	DOM 100 / 105-56 / 66	**1**
	629081.1		**BELT**		**1**
	629133.0		**BELT**		**1**
	629133.1		**BELT**		**1**
	629142.0		**BELT**	COMM 116 / 228-DOM 204 / 203 MEG	**1**
	629214.0		**BELT**	DOM 100 / 105-106-56 / 66-76	**1**
	629214.1		**BELT**	DOM 112-114-115-116-68	**1**
	629279.0		**BELT**	COMM 114-DOM 106-108 / 118 HYD	**1**
	629366.0		**BELT**		**1**
	629366.1		**BELT**	DOM 106-	**1**
	629402.0		**BELT**		**1**
	629410.0		**BELT**	DOM 106-112-114-115-116	**1**
	629412.0		**BELT**	JAG 70 SF	**1**
	629436.0		**BELT**	DOM 56 / 66-76	**1**
	629438.0		**BELT**		**1**
	629441.0		**BELT**	DOM 106-108 / 118 HYD-116	**1**
	629510.0		**BELT**	DOM 100 / 105-80 / 85	**1**
	629510.1		**BELT**	DOM 108 / 118 HYD-LEX 480	**1**
	629580.0		**BELT**		**1**
	629732.0		**BELT**	DOM 100 / 105-108 / 118 HYD-108 / 1	**1**
	629732.2		**BELT**	JAG 682S / SL	**1**
	629737.0		**BELT**	DOM 56 / 66-76-JAG 70 SF	**1**
	629756.0		**BELT**	DOM 48-58-68-JAG 682S / SL	**1**
	629763.0		**BELT**	COMM 114-115-116 / 228-DOM	**1**
	629764.0		**BELT**	DOM 108 / 118 HYD	**1**
	629769.0		**BELT**	DOM 108 / 118 MECH-112-204 / 203 MEG	**1**
	629769.1		**BELT**	DOM 88 VX-98 VX	**1**
	629836.0		**BELT**	DOM 108 / 118 MECH-112-68-98	**1**
	629908.0		**BELT**	DOM 108 / 118 HYD-108 / 118 MECH-98	**1**
	630025.0		**BELT**	MAT / STD / GIG OLDER MODELS SF	**1**
	630030.1		**BELT**		**1**
	630043.0		**BELT**	MAT / STD / GIG SF	**1**
	630118.0		**BELT**	SF	**1**
	630144.0		**BELT**	MAT / STD / GIG MER 50 / 60-S70	**1**
	630156.0		**BELT**	MAT / STD / GIG SF	**1**
	630169.0		**BELT**		**1**
	631904.0		**BELT**	SENATOR	**1**
	633030.0		**BELT**	DOM 80 / 85-OLDER MODELS -SENATOR	**1**

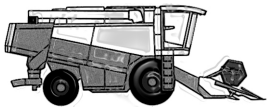

CLAAS

Pos.	Codice Originale	Codice RIMA	Descrizione Description	Applicazione Application	Conf. Pack.
	633030.1		**BELT**	JAG 70 SF	**1**
	633030.2		**BELT**	COMM 116 / 228-DOM 116-218 / 20	**1**
	634019.0		**BELT**	MER 50 / 60-S70 / 75-OLDER MODELS	**1**
	634019.1		**BELT**		**1**
	635494.0		**BELT**	DOM 56 / 66-86-88 VX	**1**
	636021.0		**BELT**	MAT / STD / GIG SF	**1**
	636021.1		**BELT**	MAT / STD / GIG SF	**1**
	640653.0		**BELT**	DOM 106-108 / 118 HYD-108 / 118 MEC	**1**
	640653.1		**BELT**	COMM 114-115-116 / 228-DOM	**1**
	644014.0		**BELT**	DOM 114	**1**
	644014.1		**BELT**	COMM 114-115-116 / 228-DOM	**1**
	644015.0		**BELT**	DOM 112	**1**
	644015.1		**BELT**	COMM 114-115-116 / 228-DOM	**1**
	644016.1		**BELT**	COMM 114-115-116 / 228-DOM	**1**
	644016.1		**BELT**	COMM 114-115-116 / 228-DOM	**1**
	644017.0		**BELT**	COMM 115-116 / 228-DOM 115	**1**
	644018.0		**BELT**	DOM 115-116	**1**
	644018.1		**BELT**	COMM 115-116 / 228	**1**
	644117.0		**BELT**		**1**
	644141.0		**BELT**	COMM 114-115-DOM 112-114	**1**
	644141.1		**BELT**	COMM 116 / 228-DOM 108 VX-204	**1**
	644177.0		**BELT**	COMM 114-115-116 / 228-DOM	**1**
	644209.0		**BELT**	DOM 112-114-115-116-LEX 4	**1**
	644267.0		**BELT**	COMM 116 / 228-DOM 116	**1**
	644368.0		**BELT**		**1**
	644369.0		**BELT**		**1**
	644403.0		**BELT**	COMM 116 / 228-DOM 218 / 208 MEG	**1**
	644404.1		**BELT**	DOM 108 / 118 HYD-108 VX-218 / 208	**1**
	644405.0		**BELT**		**1**
	644405.1		**BELT**	DOM 108 / 118 HYD	**1**
	644405.2		**BELT**		**1**
	644418.0		**BELT**	COMM 116 / 228-DOM 204 / 203 MEG	**1**
	644418.1		**BELT**	COMM 116 / 228	**1**
	644419.0		**BELT**	COMM 116 / 228-DOM 108 / 118 HYD	**1**
	644447.0		**BELT**	DOM 108 / 118 HYD-108 / 118 MECH-10	**1**
	644448.0		**BELT**	DOM 108 / 118 HYD-108 VX-204 / 203	**1**
	644465.0		**BELT**		**1**
	644538.0		**BELT**	MED 340	**1**
	644685.1		**BELT**	LEX 480	**1**
	644771.0		**BELT**	LEX 410 / 405	**1**
	646128.0		**BELT**		**1**

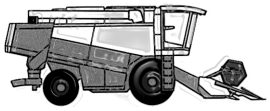

CLAAS

Pos.	Codice Originale	Codice RIMA	Descrizione Description	Applicazione Application	Conf. Pack.
	653059.0		**BELT**	MER 50 / 60-S70 / 75-PROTECTOR -S	**1**
	653060.0		**BELT**	MER 50 / 60-S70 / 75-PROTECTOR -S	**1**
	653062.0		**BELT**	MER 50 / 60-S70 / 75-PROTECTOR -S	**1**
	653063.0		**BELT**	MER 50 / 60-S70 / 75-PROTECTOR -S	**1**
	653064.0		**BELT**	MER 50 / 60-S70 / 75-PROTECTOR -S	**1**
	653120.0		**BELT**	MER 50 / 60-S70 / 75-PROTECTOR -S	**1**
	653121.0		**BELT**	MAT / STD / GIG MER 50 / 60-PROTEC	**1**
	653380.0		**BELT**	MER S70 / 75-SENATOR	**1**
	653380.1		**BELT**		**1**
	653450.0		**BELT**	MER 50 / 60-S70 / 75-PROTECTOR	**1**
	653779.0		**BELT**	MER 50 / 60-PROTECTOR	**1**
	653933.0		**BELT**	MER 50 / 60-S70 / 75-PROTECTOR -S	**1**
	654013.0		**BELT**	SENATOR	**1**
	654534.0		**BELT**	MER S70 / 75	**1**
	655408.0		**BELT**	MER 50 / 60-S70 / 75-PROTECTOR -S	**1**
	656028.0		**BELT**	DOM 80 / 85-MED 330 / 320 / 310-3	**1**
	657793.0		**BELT**	DOM 108 / 118 HYD-204 / 203 MEG-88	**1**
	659025.0		**BELT**	JAG 685 / 690-695 / 690 / 685 SL	**1**
	660409.0		**BELT**	DOM 108 / 118 HYD-108 VX-218 / 208	**1**
	661031.0		**BELT**	DOM 204 / 203 MEG-218 / 208 MEG	**1**
	661031.1		**BELT**		**1**
	661092.1		**BELT**	COMM 116 / 228-DOM 108 / 118 HYD	**1**
	661093.0		**BELT**	COMM 116 / 228-DOM 108 / 118 HYD	**1**
	661114.0		**BELT**	DOM 108 / 118 HYD-218 / 208 MEG	**1**
	661220.0		**BELT**	DOM 108 / 118 HYD-108 / 118 MECH-20	**1**
	661220.1		**BELT**	DOM 108 VX-88 VX-98 VX-MED 33	**1**
	661239.0		**BELT**	DOM 218 / 208 MEG	**1**
	661239.1		**BELT**		**1**
	661244.0		**BELT**	DOM 108 / 118 HYD-108 VX-218 / 208	**1**
	661245.0		**BELT**	COMM 116 / 228-DOM 108 / 118 HYD	**1**
	661298.0		**BELT**	DOM 108 / 118 HYD-108 VX-218 / 208	**1**
	661301.0		**BELT**	DOM 108 / 118 HYD-88 VX-98 VX-M	**1**
	661337.0		**BELT**	DOM 108 VX-204 / 203 MEG-MED 340	**1**
	661345.0		**BELT**	COMM 116 / 228-DOM 108 / 118 HYD	**1**
	661362.1		**BELT**	DOM 204 / 203 MEG	**1**
	661378.1		**BELT**	DOM 204 / 203 MEG-218 / 208 MEG	**1**
	661427.0		**BELT**	LEX 410 / 405	**1**
	661429.0		**BELT**	MED 330 / 320 / 310	**1**
	661430.0		**BELT**		**1**
	661451.0		**BELT**	DOM 218 / 208 MEG	**1**
	661458.0		**BELT**	DOM 204 / 203 MEG-98 VX	**1**

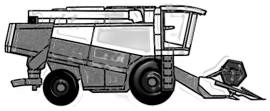

CLAAS

Pos.	Codice Originale	Codice RIMA	Descrizione Description	Applicazione Application	Conf. Pack.
	664209.0		**BELT**		**1**
	664448.0		**BELT**	COMM 116 / 228	**1**
	667242.0		**BELT**	LEX 410 / 405-430 / 415-460 / 440-4	**1**
	667248.0		**BELT**	LEX 410 / 405-430 / 415-460 / 440-4	**1**
	667249.0		**BELT**	LEX 410 / 405-430 / 415-460 / 440-4	**1**
	667250.0		**BELT**	LEX 460 / 440-480	**1**
	667251.0		**BELT**	LEX 410 / 405-430 / 415-460 / 440-4	**1**
	667252.0		**BELT**	LEX 410 / 405-430 / 415-460 / 440-4	**1**
	667255.0		**BELT**	LEX 430 / 415-460 / 440-480	**1**
	667427.0		**BELT**	LEX 480	**1**
	667453.0		**BELT**	LEX 460 / 440	**1**
	667454.0		**BELT**	LEX 410 / 405-430 / 415-460 / 440-4	**1**
	667456.0		**BELT**	LEX 430 / 415-460 / 440-480-	**1**
	667457.0		**BELT**	LEX 410 / 405-430 / 415-460 / 440-4	**1**
	667458.0		**BELT**	LEX 430 / 415-460 / 440-480	**1**
	667477.0		**BELT**	LEX 410 / 405-430 / 415-460 / 440	**1**
	667530.0		**BELT**	LEX 430 / 415-460 / 440-480	**1**
	667546.0		**BELT**		**1**
	667551.0		**BELT**	LEX 430 / 415-460 / 440-480	**1**
	667554.0		**BELT**	LEX 480	**1**
	667560.1		**BELT**	LEX 410 / 405-430 / 415-460 / 440-4	**1**
	667561.1		**BELT**	LEX 410 / 405-430 / 415-460 / 440-4	**1**
	667651.0		**BELT**	LEX 410 / 405-430 / 415-460 / 440-4	**1**
	667673.0		**BELT**	LEX 410 / 405-430 / 415	**1**
	667680.0		**BELT**	LEX 410 / 405-430 / 415	**1**
	667681.0		**BELT**	LEX 410 / 405-430 / 415	**1**
	667683.0		**BELT**	LEX 410 / 405-430 / 415	**1**
	667684.0		**BELT**	LEX 430 / 415	**1**
	667798.2		**BELT**	LEX 480	**1**
	667881.0		**BELT**	LEX 480	**1**
	667891.0		**BELT**	LEX 480	**1**
	667934.0		**BELT**	LEX 410 / 405	**1**
	667947.0		**BELT**	LEX 410 / 405	**1**
	667957.0		**BELT**	LEX 410 / 405	**1**
	667958.0		**BELT**		**1**
	667958.2		**BELT**	LEX 460 / 440	**1**
	667973.0		**BELT**	LEX 410 / 405-430 / 415-460 / 440	**1**
	667974.0		**BELT**	LEX 410 / 405-430 / 415-460 / 440	**1**
	667981.2		**BELT**	LEX 410 / 405-430 / 415	**1**
	667983.0		**BELT**	LEX 480	**1**
	670224.0		**BELT**	DOM 100 / 105-106-108 / 118 HYD	**1**

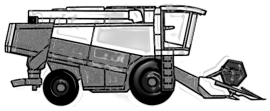

CLAAS

Pos.	Codice Originale	Codice RIMA	Descrizione Description	Applicazione Application	Conf. Pack.
	671012.0		**BELT**	DOM 56 / 66-76-80 / 85-86-96	**1**
	671013.0		**BELT**	DOM 108 / 118 HYD-108 / 118 MECH	**1**
	671015.0		**BELT**	DOM 80 / 85	**1**
	671083.0		**BELT**	DOM 80 / 85	**1**
	671209.0		**BELT**	DOM 100 / 105-204 / 203 MEG-56 / 66	**1**
	672351.0		**BELT**	DOM 106	**1**
	672353.0		**BELT**	DOM 100 / 105	**1**
	672358.0		**BELT**	DOM 100 / 105-56 / 66-76-80 / 85	**1**
	672359.0		**BELT**	DOM 100 / 105-56 / 66-76-80 / 85	**1**
	672359.1		**BELT**		**1**
	673601.0		**BELT**	DOM 80 / 85	**1**
	673614.0		**BELT**	DOM 100 / 105-106-48-56 / 66	**1**
	673625.0		**BELT**	DOM 76-80 / 85-96-98-JAG	**1**
	673638.0		**BELT**	DOM 108 / 118 MECH-86-98	**1**
	673639.0		**BELT**	DOM 80 / 85	**1**
	673639.1		**BELT**		**1**
	673690.0		**BELT**	DOM 80 / 85	**1**
	673690.1		**BELT**		**1**
	680334.0		**BELT**	DOM 108 / 118 HYD-108 / 118 MECH	**1**
	680334.1		**BELT**	COMM 114-115-116 / 228-DOM	**1**
	681678.0		**BELT**		**1**
	685693.0		**BELT**	DOM 106	**1**
	687046.0		**BELT**	COMM 116 / 228-MER S70 / 75	**1**
	689175.0		**BELT**	DOM 106-108 / 118 HYD-108 / 118 MEC	**1**
	692149.0		**BELT**	COMM 114-115-116 / 228-DOM	**1**
	692150.0		**BELT**	COMM 114-115-116 / 228-DOM	**1**
	695610.0		**BELT**	DOM 108 / 118 HYD-108 / 118 MECH-20	**1**
	702509.0		**BELT**	CONSUL	**1**
	702536.0		**BELT**	CONSUL	**1**
	703314.0		**BELT**	CONSUL	**1**
	706087.0		**BELT**	CONSUL	**1**
	706829.0		**BELT**	CONSUL	**1**
	707001.1		**BELT**		**1**
	712419.2		**BELT**		**1**
	713506.0		**BELT**	CONSUL DOM 108/118 HYD-108/118 MEC	**1**
	720695.0		**BELT**	CONSUL	**1**
	720696.0		**BELT**	CONSUL	**1**
	720866.0		**BELT**	CONSUL DOM 80 / 85	**1**
	721168.0		**BELT**	DOM 58	**1**
	721295.0		**BELT**		**1**
	721306.0		**BELT**	CONSUL	**1**

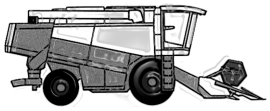

CLAAS

Pos.	Codice Originale	Codice RIMA	Descrizione Description	Applicazione Application	Conf. Pack.
	721307.0		**BELT**	CONSUL	**1**
	722107.0		**BELT**		**1**
	724100.0		**BELT**	DOM 58-68	**1**
	724101.0		**BELT**	DOM 48	**1**
	724141.0		**BELT**	DOM 48-58-68	**1**
	724168.0		**BELT**	DOM 48	**1**
	724180.0		**BELT**	DOM 48	**1**
	724181.0		**BELT**	DOM 58-68	**1**
	724247.0		**BELT**	DOM 58	**1**
	724247.1		**BELT**	DOM 68	**1**
	724248.0		**BELT**	DOM 48	**1**
	724248.1		**BELT**		**1**
	724301.0		**BELT**	DOM 48-58-	**1**
	724339.0		**BELT**		**1**
	733311.0		**BELT**		**1**
	742025.0		**BELT**	LEX 410 / 405-430 / 415-460 / 440-4	**1**
	742026.0		**BELT**	LEX 430 / 415-460 / 440-480	**1**
	742206.0		**BELT**		**1**
	746505.0		**BELT**		**1**
	746506.0		**BELT**		**1**
	746550.0		**BELT**		**1**
	749712.0		**BELT**	LEX 480	**1**
	750193.2		**BELT**	JAG 685 / 690-695 / 690 / 685 SL	**1**
	750284.0		**BELT**	EUROPA	**1**
	750288.0		**BELT**	COMM 116 / 228	**1**
	750294.0		**BELT**	COLUMBUS JAG 682S/SL-MAT/STD/GIGA	**1**
	750295.0		**BELT**		**1**
	750296.0		**BELT**	COLUMBUS	**1**
	750316.0		**BELT**	EUROPA	**1**
	750451.0		**BELT**	MERCUR	**1**
	750624.0		**BELT**	COLUMBUS	**1**
	750888.0		**BELT**	EUROPA	**1**
	751112.0		**BELT**	COLUMBUS EUROPA MERCUR	**1**
	755070.0		**BELT**	EUROPA MER 50 / 60-S70 / 75-MERCUR	**1**
	755070.1		**BELT**	DOM 108 VX-98 VX-MED 330 / 320	**1**
	756051.0		**BELT**	COLUMBUS EUROPA	**1**
	756059.0		**BELT**	COLUMBUS EUROPA	**1**
	758662.0		**BELT**	EUROPA MERCUR	**1**
	758719.0		**BELT**	EUROPA LEX 410/405-430/415-460/44	**1**
	758853.0		**BELT**	MERCUR	**1**
	758854.0		**BELT**	MERCUR	**1**

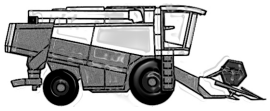

CLAAS

Pos.	Codice Originale	Codice RIMA	Descrizione Description	Applicazione Application	Conf. Pack.
	767057.0		**BELT**	DOM 48-58-80 / 85-86-98	**1**
	769202.0		**BELT**	DOM 100 / 105-80 / 85	**1**
	770214.0		**BELT**	MERCUR	**1**
	772647.1		**BELT**		**1**
	772657.0		**BELT**	COLUMBUS EUROPA	**1**
	772658.0		**BELT**	COLUMBUS EUROPA MAT/STD/GIG	**1**
	772659.0		**BELT**	EUROPA	**1**
	772660.0		**BELT**	COLUMBUS	**1**
	773313.0		**BELT**	COLUMBUS EUROPA MERCUR	**1**
	774099.0		**BELT**	CONSUL	**1**
	774100.0		**BELT**	COLUMBUS EUROPA	**1**
	775049.0		**BELT**	EUROPA	**1**
	775698.0		**BELT**	COLUMBUS EUROPA MERCUR	**1**
	778561.0		**BELT**	CONSUL DOM 48-58-MAT / STD / GIG	**1**
	778717.0		**BELT**	CONSUL DOM 80 / 85-MERCUR	**1**
	778717.1		**BELT**	DOM 68	**1**
	779039.0		**BELT**	MERCUR	**1**
	779212.0		**BELT**	MERCUR	**1**
	779213.0		**BELT**	MERCUR	**1**
	779214.0		**BELT**	MERCUR	**1**
	779272.0		**BELT**	MERCUR	**1**
	780419.0		**BELT**	MERCUR	**1**
	783268.1		**BELT**	DOM 68	**1**
	783430.1		**BELT**	DOM 108 / 118 HYD-108 / 118 MECH-56	**1**
	783476.0		**BELT**		**1**
	783876.0		**BELT**	DOM 108 / 118 HYD	**1**
	785176.0		**BELT**	DOM 48-58-68	**1**
	785341.0		**BELT**	DOM 108 VX-98 VX-MED 330 / 320	**1**
	791307.0		**BELT**		**1**
	800309.0		**BELT**	COLUMBUS EUR MAT/STD/GIG MERCUR	**1**
	801221.0		**BELT**	COLUMBUS EUROPA	**1**
	801222.0		**BELT**	COLUMBUS MAT / STD / GIG SENATOR	**1**
	802931.0		**BELT**	COMM 116 / 228-DOM 100 / 105-58	**1**
	821734.2		**BELT**	DOM 108 / 118 HYD	**1**
	873614.0		**BELT**		**1**
	908629.1		**BELT**		**1**
	943227.0		**BELT**	JAG 60	**1**
	943234.0		**BELT**	JAG 60	**1**
	947916.0		**BELT**		**1**
	949396.0		**BELT**		**1**
	981678.0		**BELT**	JAG 75 / 71	**1**

CLAAS JAGUAR

Testata - *Header*

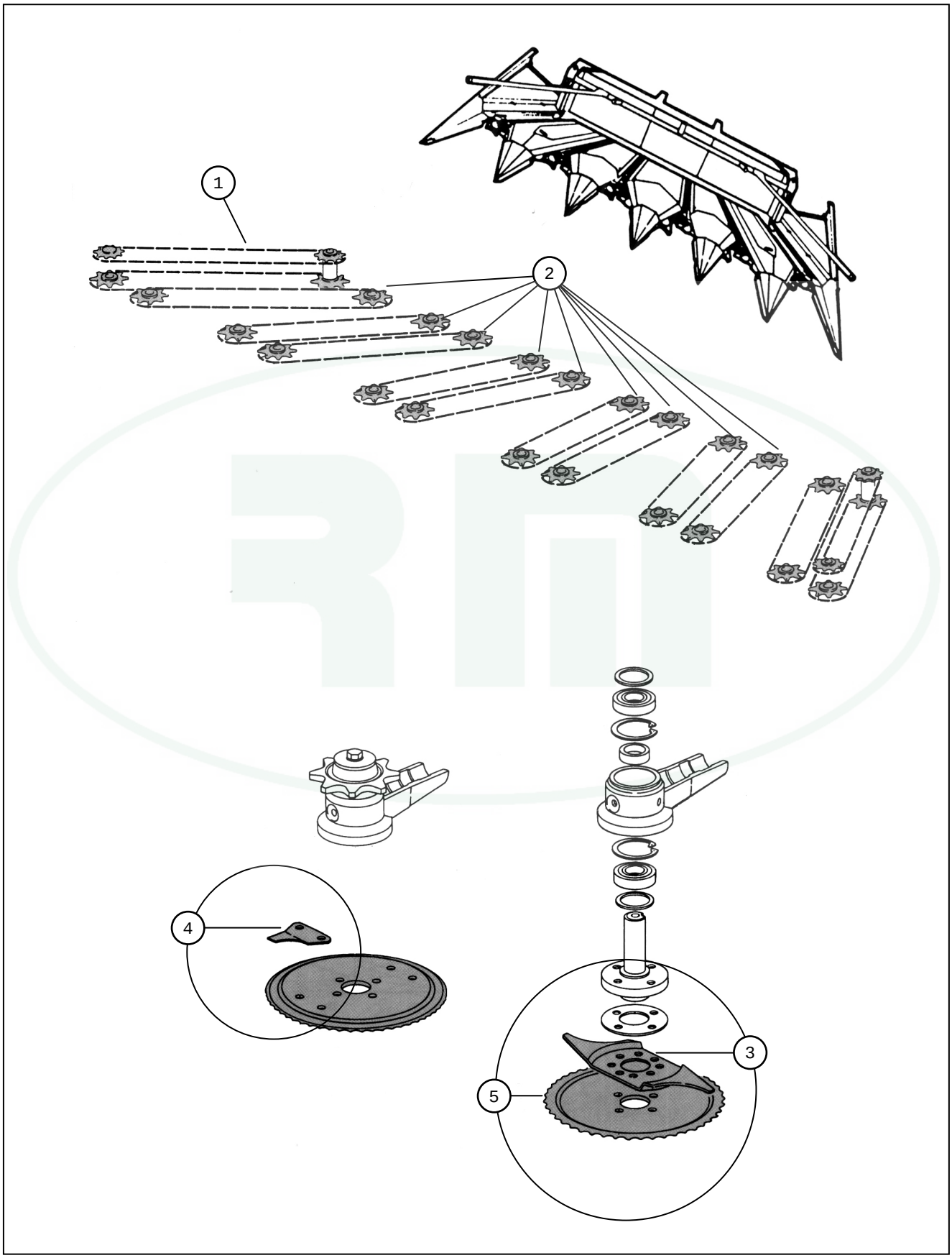

CLAAS JAGUAR

Pos.	Codice Originale	Codice RIMA	Descrizione Description	Applicazione Application	Conf. Pack.
			TESTATA *Header*		
1	**912096**	**RM10-548**	**Conveyor chain**	JAG.685/695 - 820/880 110 m.	**1**
	912990	**RM10-551**	**Conveyor chain**	JAG.800/880 48 m.	**1**
	912991	**RM10-552**	**Conveyor chain**	JAG.800/880 50 m.	**1**
	912992	**RM10-553**	**Conveyor chain**	JAG.820/880 52 m.	**1**
	912993	**RM10-554**	**Conveyor chain**	JAG.820/880 54 m.	**1**
	940860	**RM10-555**	**Chain**	41,4x22x17,78	**1**
2	**912089**	**RM10-547**	**Sprocket**	JAG.675/695 - 800/880	**1**
	912185	**RM10-549**	**Sprocket**	JAG.675/695 - 800/880	**1**
	912199	**RM10-550**	**Sprocket**	JAG.675/695 - 800/880	**1**
3	**912087**	**RM10-325**	**Support**	880/800 - 695/680	**1**
4	**912082**	**RM10-556**	**Support**	880/800 - 695/680	**1**
5	**990315**	**RM10-347**	**Blade**	880/800 - 695/680	**1**

CLAAS JAGUAR

Lame – *Drum Knives*

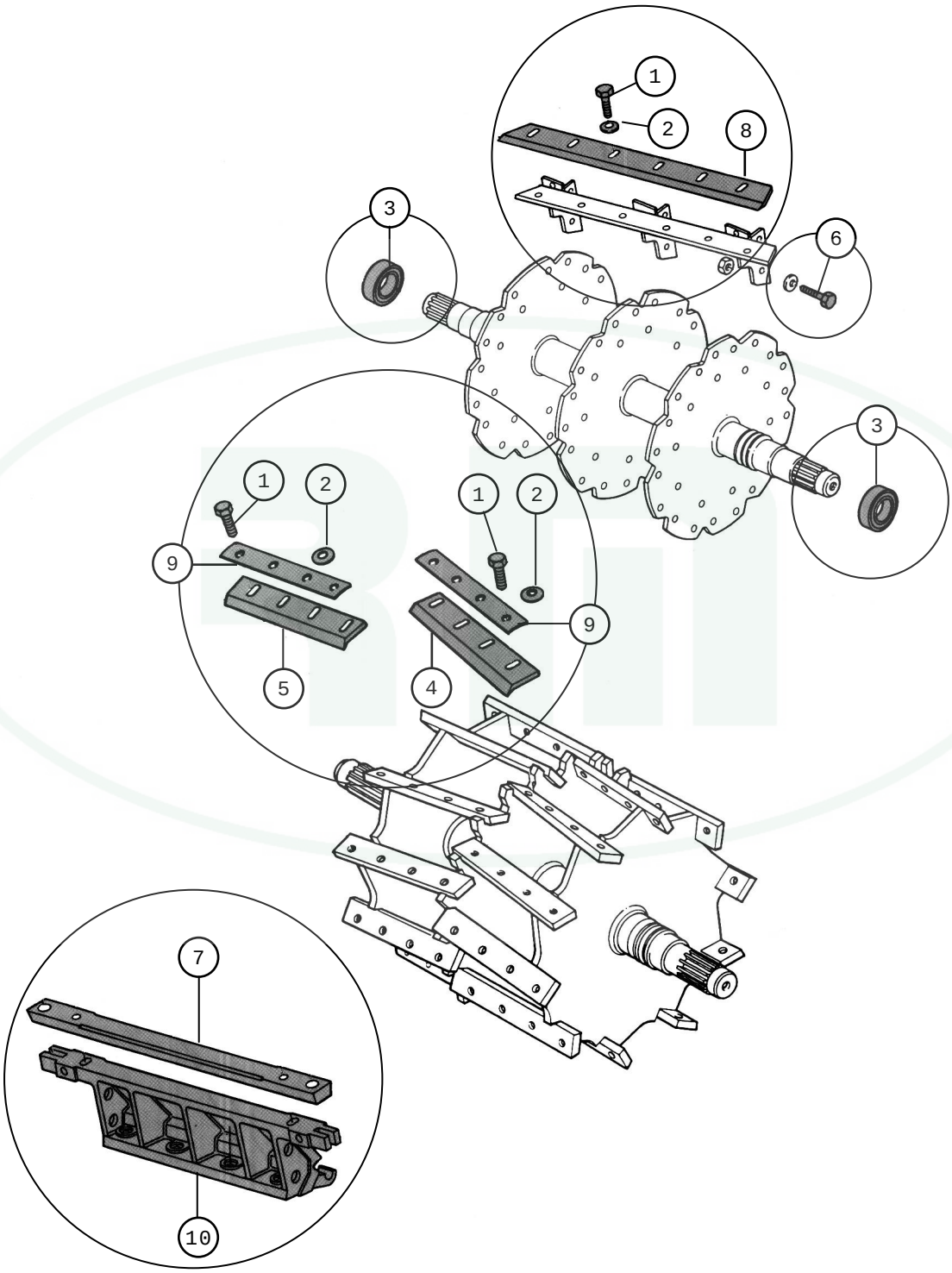

CLAAS JAGUAR

Pos.	Codice Originale	Codice RIMA	Descrizione Description	Applicazione Application	Conf. Pack.
			LAME *Drum Knives*		
01	211089	RM10-572	Screw	JAG.695SL - 675 800	50
	212318	RM10-316	Bolt	JAG.682/695 - 800	1
	233242	RM10-571	Screw	JAG.695SL - 675 800	50
02	211084	RM10-557	Washer	TUTTI I MODELLI	1
03	212317	RM10-558	Bearing	JAG.682/695 - 800	1
04	981386	RM10-336	Cutting knife	JAG.682/695 - 800	1
	982844	RM10-337	Cutting knife	JAG.682/695 - 800	1
	984671	RM10-340	Cutting knife	JAG.820/880 - 900/830	1
	984691	RM10-342	Cutting knife	JAG.820/880 - 900/830	1
05	981385	RM10-335	Cutting knife	JAG.682/695 - 800	1
	982845	RM10-338	Cutting knife	JAG.682/695 - 800	1
	984670	RM10-339	Cutting knife	JAG.820/880 - 900/830	1
	984690	RM10-341	Cutting knife	JAG.820/880 - 900/830	1
06	211495	RM10-559	Bolt	JAG.675/695	1
07	980975	RM10-333	Counterknife	JAG.682/695 - 800	1
	980976	RM10-334	Counterknife	JAG.682/695 - 800	1
	981406	RM10-575	Counterknife	JAG.695SL - 675 800	1
	984693	RM10-343	Counterknife	JAG.820/880 - 900/830	1
	984694	RM10-344	Counterknife	JAG.820/880 - 900/830	1
08	907549	RM10-577	Cutting knife	JAG.695SL - 675 800	1
	908906	RM10-573	Cutting knife	JAG.695SL - 675 800	1
09	982885	RM10-574	Support	JAG.695SL - 675 800	1
10	980075	RM10-576	Bearing	JAG.695SL - 675 800	1

CLAAS JAGUAR

Pos.	Codice Originale	Codice RIMA	Descrizione Description	Applicazione Application	Conf. Pack.
			CINGHIE *Belts*		
	052393.1		**Belt**	JAGUAR 840 / 820	**1**
	062294.0		**Belt**	JAGUAR 70 SF	**1**
	063285.0		**Belt**	JAGUAR 70 SF	**1**
	063309.0		**Belt**	JAGUAR 70 SF	**1**
	063940.0		**Belt**	JAGUAR 70 SF	**1**
	070310.1		**Belt**	JAGUAR 682S/SL-685/690-695/690/685	**1**
	070952.2		**Belt**	JAGUAR 685/690-695/690/685 SL	**1**
	072110.0		**Belt**	JAGUAR 685 / 690	**1**
	073201.0		**Belt**	JAGUAR 682S / SL	**1**
	073202.0		**Belt**	JAGUAR 682S / SL	**1**
	073203.0		**Belt**	JAGUAR 682S / SL	**1**
	073204.0		**Belt**	JAGUAR 682S/SL-695/690/685 SL	**1**
	074771.1		**Belt**	JAGUAR 695 / 690 / 685 SL	**1**
	074803.1		**Belt**	JAGUAR 695 / 690 / 685 SL	**1**
	076403.1		**Belt**	JAGUAR 840 / 820	**1**
	077276.0		**Belt**	JAGUAR 840 / 820	**1**
	077400.0		**Belt**	JAGUAR 840 / 820	**1**
	077796.0		**Belt**	JAGUAR 840 / 820	**1**
	077797.0		**Belt**	JAGUAR 840 / 820-	**1**
	133528.0		**Belt**		**1**
	133630.0		**Belt**		**1**
	176543.0		**Belt**	JAGUAR 685 / 690-695 / 690 / 685 SL	**1**
	211148.1		**Belt**	JAGUAR 60	**1**
	211238.0		**Belt**	JAGUAR 60	**1**
	512087.0		**Belt**	JAGUAR 840 / 820	**1**
	602387.0		**Belt**	JAGUAR 682S / SL	**1**
	618123.0		**Belt**	JAGUAR 70 SF-SF	**1**
	629412.0		**Belt**	JAGUAR 70 SF	**1**
	629732.2		**Belt**	JAGUAR 682S / SL	**1**
	629737.0		**Belt**	JAGUAR 70 SF	**1**
	629756.0		**Belt**	JAGUAR 682S / SL	**1**
	629763.0		**Belt**		**1**
	629769.0		**Belt**		**1**
	629836.0		**Belt**		**1**
	633030.1		**Belt**	JAGUAR 70 SF	**1**
	644015.1		**Belt**		**1**
	659025.0		**Belt**	JAGUAR 685/690-690/690/685 SL	**1**
	673614.0		**Belt**		**1**
	673625.0		**Belt**		**1**

CLAAS JAGUAR

Pos.	Codice Originale	Codice RIMA	Descrizione Description	Applicazione Application	Conf. Pack.
	750193.2		**Belt**	JAGUAR 685/690-690/690/685 SL	**1**
	750294.0		**Belt**	JAGUAR 682S / SL	**1**
	943227.0		**Belt**	JAGUAR 60	**1**
	943234.0		**Belt**	JAGUAR 60	**1**
	981678.0		**Belt**	JAGUAR 75 / 71	**1**

JOHN DEERE

Barra di Taglio - *Cutting Bar*

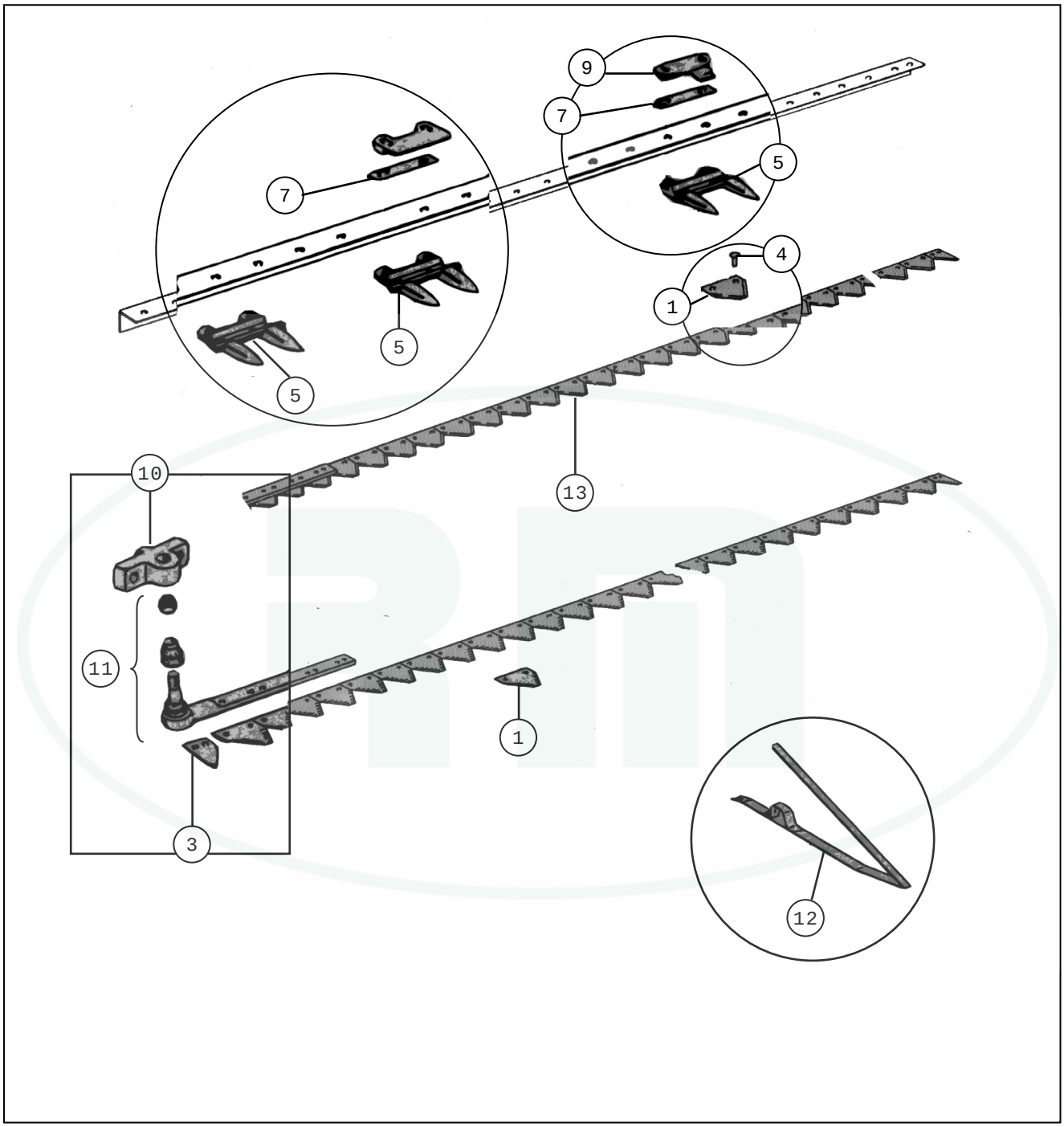

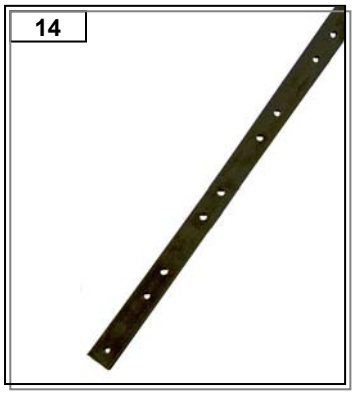

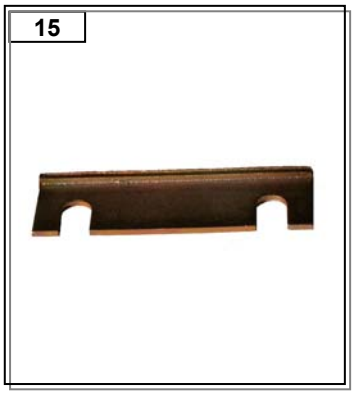

US = rigata sotto
TS = rigata sopra

TTQST = testa tonda quadro sotto t.
TT = testa tonda
TPSV = testa piana svasata

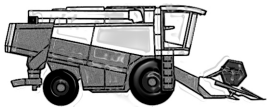

JOHN DEERE

Pos.	Codice Originale	Codice RIMA	Descrizione Description	Applicazione Application	Conf. Pack.
			BARRA DI TAGLIO *Cutterbar*		
	03M7079	RM21-118	Bolt	M10X55	1
	03M7085	RM21-119	Bolt	M10x30	1
	03M7098	RM21-120	Bolt	M10X35	1
01	BUSATIS	RM21-152	Knife section	RISO - 2,7mm. - 5802 233 21	25
	BUSATIS	RM21-153	Knife section	RISO - 2,7mm. - 5802 159 21	25
	BUSATIS	RM21-178	Knife section	RISO - 3,5mm. - 5802 247 21	25
	E76371	RM21-005	Knife section	2,7mm. - DIN80cr - H21530	25
	H125893	RM21-003	Knife section	2,7mm. - 309197cr	25
	H125894	RM21-693	Half section	Serie 900	1
	H130478	RM21-002	Knife section	2,7mm. - 309197 - H76911 - H84415	25
	H136958	RM21-694	Knife section	AH213837 (kit) - Serie 900	1
	H207929	RM21-692	Knife section	H136807 - Serie 900	1
	H45996	RM21-006	Knife section	2,7mm. - DIN300cr	25
	H84415	RM21-004	Knife section	2,7mm. - 322481	25
	P49650H	RM21-001	Knife section	2,7mm. - AZ32298	25
	Z52672	RM21-169	Knife section	AZ40032 (42010045)-Z93077-Z93078-Z47493	25
03	H150057	RM21-193	Guide	420100005 - 10923	1
	H33433	RM21-038	Guide		1
04		RM21-041	Rivet	6x18/25/28	2
	19M7580	RM21-116	Bolt	6x28	100
	19M8425	RM21-055	Bolt	6X16	100
	19M8625	RM21-117	Bolt	6x18	100
	H125890	RM21-695	Screw	Serie 900	50
	H125891	RM21-696	Screw	CL - Serie 900	50
	H125892	RM21-697	Nut	Dado per H125891-H125890-H166262 - Serie	1
	H166292	RM21-698	Screw	Serie 900	1
05	AH143573	RM21-679	Double finger	410300024 - 10701.01	1
	AH143574	RM21-084	Triple finger	410400036 - 10717.01	1
	AH168910	RM21-687	Double finger	410300041 - 12259	1
	AZ42706	RM21-010	Triple finger	410400039 - 10721.01	1
	H153719	RM21-702	Double finger	Serie 900	1
	H153855	RM21-703	Triple finger	H25603 - Serie 900	1
	H61954	RM21-012	Double finger	H145791	1
	Z11228	RM21-011	Double finger		1
	Z11785	RM21-009	Double finger	410100001 - 10616	1
07	BUSATIS	RM21-072	Thick	0,5mm.	1
	BUSATIS	RM21-073	Thick	2,0mm.	1

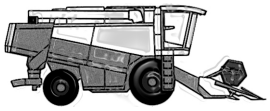

JOHN DEERE

Pos.	Codice Originale	Codice RIMA	Descrizione Description	Applicazione Application	Conf. Pack.
07	H149756	RM21-680	Thick	410413006 - 11756	1
	H150059	RM21-689	Thick	410414006 - 10757	1
	H175045	RM21-690	Thick	410401006 - 10727	1
	H203226	RM21-712	Thick	410400006 - 10728	1
	Z25258	RM21-182	Thick		1
09		RM1402	Knife clip - RM knives	universale	10
	BUSATIS	RM21-157	Knife clip	RISO 9508726	10
	H127801	RM21-156	Knife clip	9508725 Serie 900	10
	H129024	RM21-699	Knife clip	Serie 900	10
	Z32690	RM21-039	Knife clip		10
10	H80830	RM21-626	Holder	serie 900	1
	H98780	RM21-122	Holder		1
11		RM21-063	Knife head	420202303	1
	AH121075	RM21-700	Knife head	Serie 900	1
	AH143575	RM21-681	Knife head	420227301 - 11207.01	1
	AH168634	RM21-062	Knife head	420202301	1
	AH21345	RM21-015	Knife head		1
	AH21346	RM21-014	Knife head		1
	AH24247	RM21-082	Knife head		1
	AZ34218	RM21-128	Knife head	T19847 - AH121075	1
	AZ41775	RM21-682	Bushing	10941	1
	AZ50306	RM21-057	Knife head	AH60492	1
	AZ50341	RM21-093	Knife head	AZ41726 - 420215305 - 11181	1
	H157812	RM21-125	Bushing	530040477	1
12		RM21-173	Bolt	209023025	1
	AZ30962	RM21-171	Crop lifter	111512117 - 10153	1
	AZ53203	RM21-688	Crop lifter	111501116 - 10141	1
	AZ59818	RM21-172	Crop lifter	AZ34208 - ASX 100	1
13		RM21-081	Complete knife		1
		RM21-105	Complete knife	WTS9000 - SERIE 600	1
		RM21-111	Complete knife	WTS9000 - SERIE 600	1
		RM21-112	Complete knife	WTS9000 - SERIE 600	1
		RM21-113	Complete knife	WTS9000 - SERIE 600	1
		RM21-114	Complete knife	WTS9000 - SERIE 600	1
		RM21-115	Complete knife	WTS9000 - SERIE 600	1
		RM21-225	Complete knife	WTS9000 - SERIE 600	1
	AH121076	RM21-705	Complete knife	AH140379+AH140382+AH138236 - Serie 900	1
	AH121077	RM21-706	Complete knife	AH140379+AH140380+AH138236 - Serie 900	1
	AH121079	RM21-707	Complete knife	AH140379+AH140380+AH140381+AH13832	1

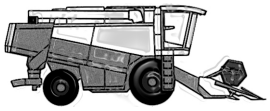

JOHN DEERE

Pos.	Codice Originale	Codice RIMA	Descrizione Description	Applicazione Application	Conf. Pack.
13	AH121081	RM21-713	Complete knife	AH140379 - AH140380 - AH140381 - AH138	1
	AH121083	RM21-708	Complete knife	AH140379+AH140380+AH140382+AH13823	1
	AH121085	RM21-709	Complete knife	AH140379+(2)AH140380+AH138236 - Serie	1
	AH121087	RM21-710	Complete knife	AH140379+(2)AH140380+AH140382+AH138	1
	AH121221	RM21-714	Complete knife	AH140389 - (2) 140380 - 140382 - AH138236	1
	AH140389	RM21-167	Complete knife		1
	AH140390	RM21-129	Complete knife		1
	AH144033	RM21-683	Complete knife - sectional	422075750 - 11560	1
	AH144034	RM21-500	Complete knife	427027002 - 12190	1
	AH144035	RM21-684	Complete knife	428000002 - 12253	1
	AH144036	RM21-685	Complete knife - sectional	429000004 - 12259	1
	AZ10801	RM21-034	Complete knife		1
	AZ10802	RM21-036	Complete knife		1
	AZ10803	RM21-037	Complete knife		1
	AZ10806	RM21-029	Complete knife		1
	AZ10807	RM21-030	Complete knife		1
	AZ10808	RM21-031	Complete knife		1
	AZ10809	RM21-043	Complete knife		1
	AZ13992	RM21-035	Complete knife		1
	AZ16197	RM21-033	Complete knife		1
	AZ41681/V	RM21-145	Complete knife	AZ37757/AZ40568/AZ41689/AZ41696	1
	AZ41682/V	RM21-146	Complete knife	AZ37758/AZ40569/AZ41690/AZ41697	1
	AZ41683/V	RM21-147	Complete knife	AZ33759/AZ40570/AZ41691/AZ41698	1
	AZ41684/V	RM21-148	Complete knife	AZ37760/AZ40571/AZ41692/AZ41699	1
	AZ41685/V	RM21-149	Complete knife	AZ38488/AZ41687	1
	AZ41686/V	RM21-144	Complete knife	AZ41688/AZ42020	1
	AZ42020	RM21-686	Complete knife	422215300 - 11735	1
	BUSATIS	RM21-130	Complete knife	RISO	1
	BUSATIS	RM21-131	Complete knife	RISO	1
	BUSATIS	RM21-154	Complete knife	RISO	1
	BUSATIS	RM21-155	Complete knife	RISO	1
14		RM21-020	Knife back	25x6	1
		RM21-021	Knife back	25x6	1
		RM21-022	Knife back	25x6	1
		RM21-023	Knife back	25x6	1
		RM21-024	Knife back	25x6	1
		RM21-025	Knife back	19x5,5	1
		RM21-026	Knife back	25x6-7"	1
		RM21-027	Knife back	25x6-7+9"	1
		RM21-028	Knife back	25x6-8,5"	1

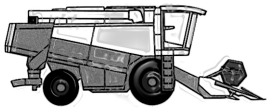

JOHN DEERE

Pos.	Codice Originale	Codice RIMA	Descrizione Description	Applicazione Application	Conf. Pack.
14		RM21-032	Knife back	20x6	1
		RM21-075	Knife back	21x6	1
		RM21-076	Knife back	21x6	1
		RM21-077	Knife back	21x6	1
		RM21-078	Knife back	21x6	1
		RM21-150	Knife back	21x6	1
		RM21-151	Knife back	21x6	1
	BUSATIS	RM21-159	Knife back	RISO 25x8	1
	BUSATIS	RM21-160	Knife back	RISO 25x8	1
	H128235	RM21-701	Support	Serie 900	1
15	BUSATIS	RM21-158	Wearing plate	RISO	1
	H153157	RM21-704	Wearing plate	Serie 900	1
	Z32049	RM21-040	Wearing plate	L19971	1

Notes

JOHN DEERE

Comando Lama - *Gearbox*

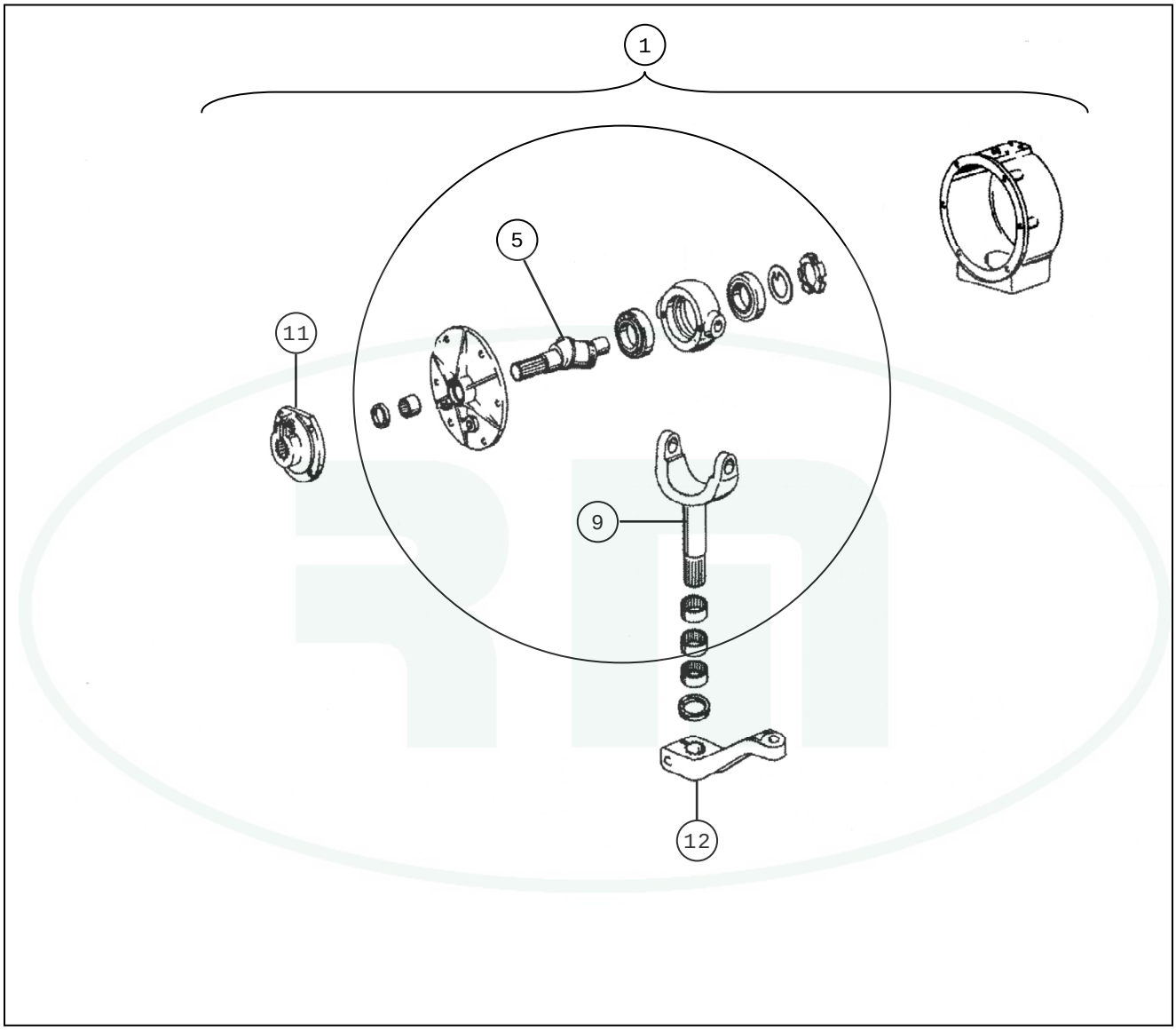

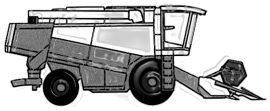

JOHN DEERE

Pos.	Codice Originale	Codice RIMA	Descrizione Description	Applicazione Application	Conf. Pack.
			COMANDO LAMA *Gearbox*		
01	AE41481	RM21-671	Gearbox	6622	1
05	AE55172	RM21-674	Shaft		1
	E60129	RM21-673	Shaft		1
	H36073	RM21-675	Shaft		1
09	AE38050	RM21-667	Fork	E61651/E56837 - 6620	1
	AE51772	RM21-668	Fork	E61651/E56837 - 6620	1
11	AE46307	RM21-672	Housing	AE34804	1
12	AE35152	RM21-669	Support	6620	1
	H86911	RM21-670	Support	6620	1

JOHN DEERE

Coclea - *Auger*

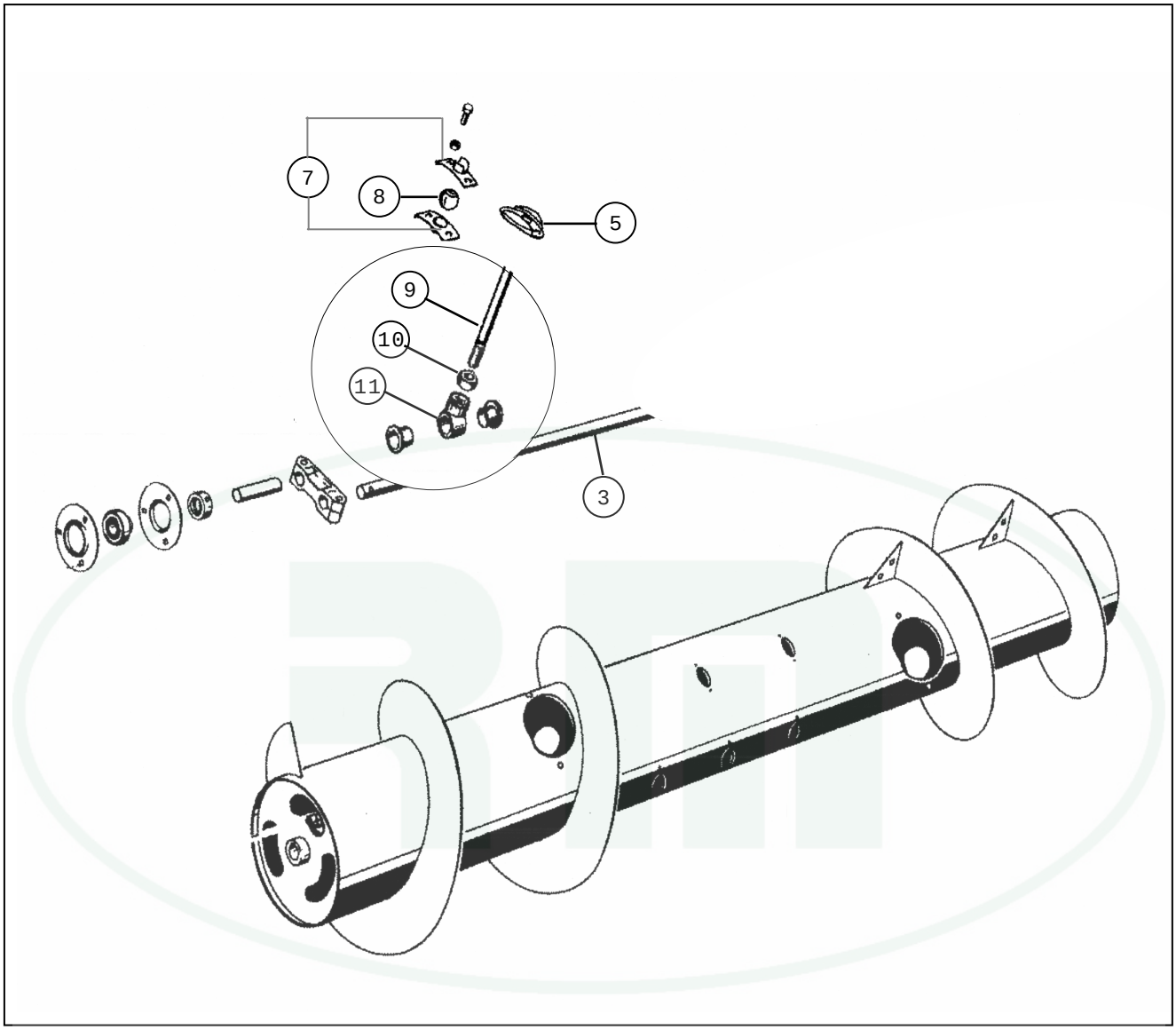

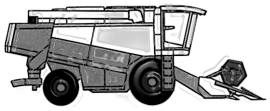

JOHN DEERE

Pos.	Codice Originale	Codice RIMA	Descrizione Description	Applicazione Application	Conf. Pack.
			COCLEA *Auger*		
03	Z32714	RM21-627	Shaft		1
	Z40958	RM21-628	Shaft		1
05	H168206	RM21-711	Finger guide	serie 900	1
	Z30752	RM21-050	Finger guide		25
07	P45456/7	RM21-044	Support kit		1
08	P45458	RM21-046	Guide ball		1
09	AZ15493	RM21-168	Retractable finger kit		1
	AZ30561	RM21-087	Retractable finger kit		1
	CQ21087	RM21-327	Support	AZ49886N	1
	H102724	RM21-086	Retractable finger	Z59227 - H150050 - H162662 - AZ49886N	10
	H169914	RM21-042	Retractable finger	serie 900	10
	Z11366	RM21-085	Retractable finger	16x200	10
	Z26570	RM21-047	Retractable finger	Z31991 - 16x220	10
	Z26570/1	RM21-047a	Retractable finger - RM modification	diam. 14mm.	10
10	14M7131	RM21-191	Nut	237519	50
11	AH107066	RM21-088	Suppport	AZ49213 - diam. 35mm.	1
	AH171602	RM21-678	T bushing	serie 900 - H169911	10
	AZ20696	RM21-048	T bushing		10
	AZ20696/1	RM21-048a	T bushing - RM modification	universale - diam. 25mm.	10
	H169912	RM21-719	Cover		1
	H172459	RM21-677	Support	serie 900	1
	Z26570/a	RM21-047b	Pin	universale	1

JOHN DEERE

Aspo - *Reel Tines*

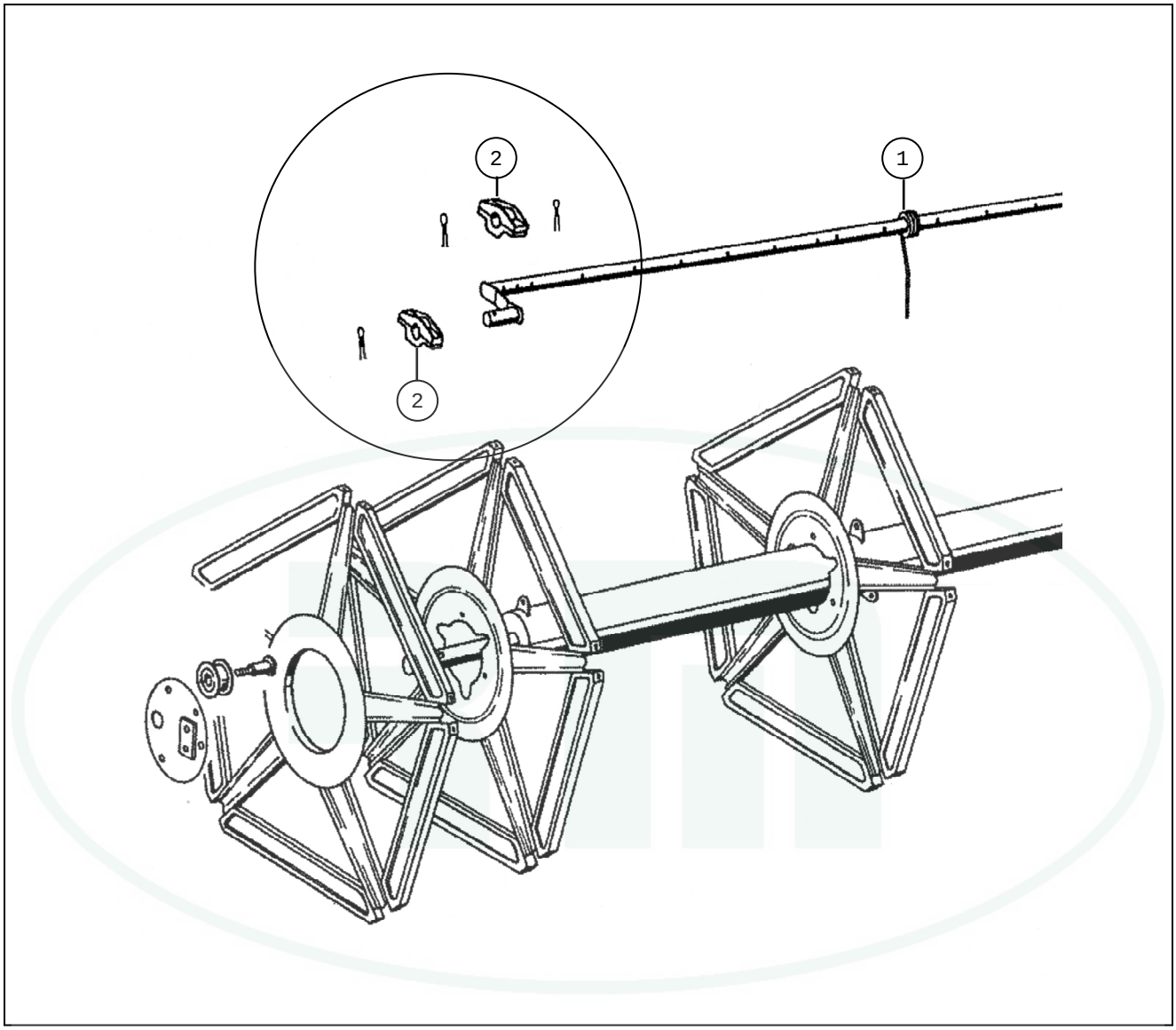

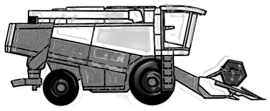

JOHN DEERE

Pos.	Codice Originale	Codice RIMA	Descrizione Description	Applicazione Application	Conf. Pack.
			ASPO *Reel Tines*		
	Z20480	**RM21-629**	**Support**		**1**
	Z20485	**RM21-630**	**Bushing**		**1**
	Z26070	**RM21-631**	**Bushing**		**1**
	Z31550	**RM21-632**	**Bushing**		**1**
	Z32191	**RM21-633**	**Flange**		**1**
01	**Z56957**	**RM21-174**	**Reel tine**		**20**
	Z56958	**RM21-175**	**Reel tine**	Z20478 - H333116	**20**
02	**H136954**	**RM21-121**	**Support kit**	H175727	**10**
	H136956	**RM21-123**	**Support kit**	H175693	**10**
	Z27380	**RM21-049**	**Support kit**		**10**
	Z55823	**RM21-406**	**Support kit**		**10**

JOHN DEERE

Guide Alimentazione – *Conveyor Guides*

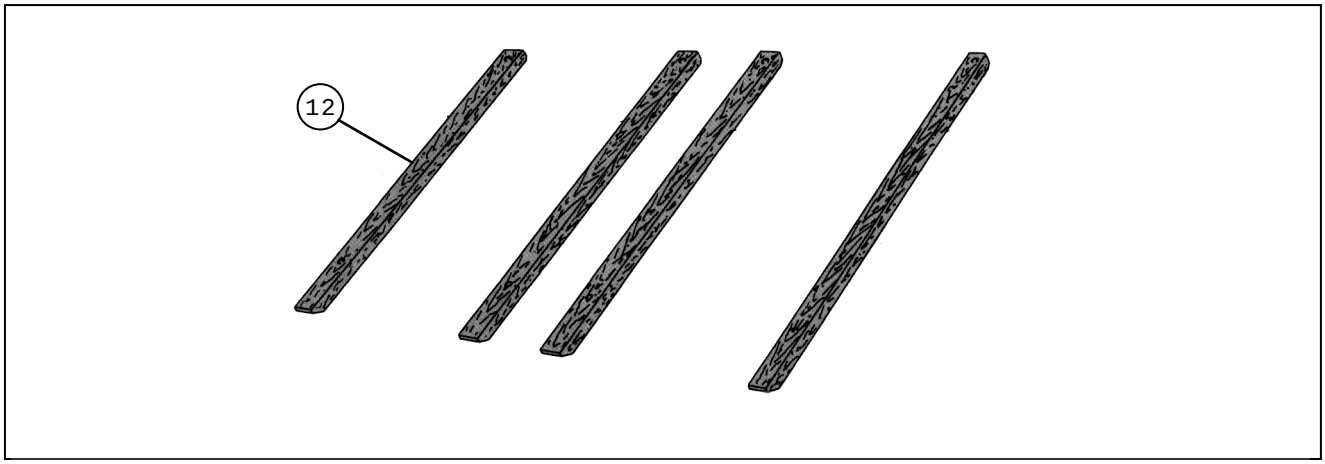

Alimentazione - *Feeder Channel*

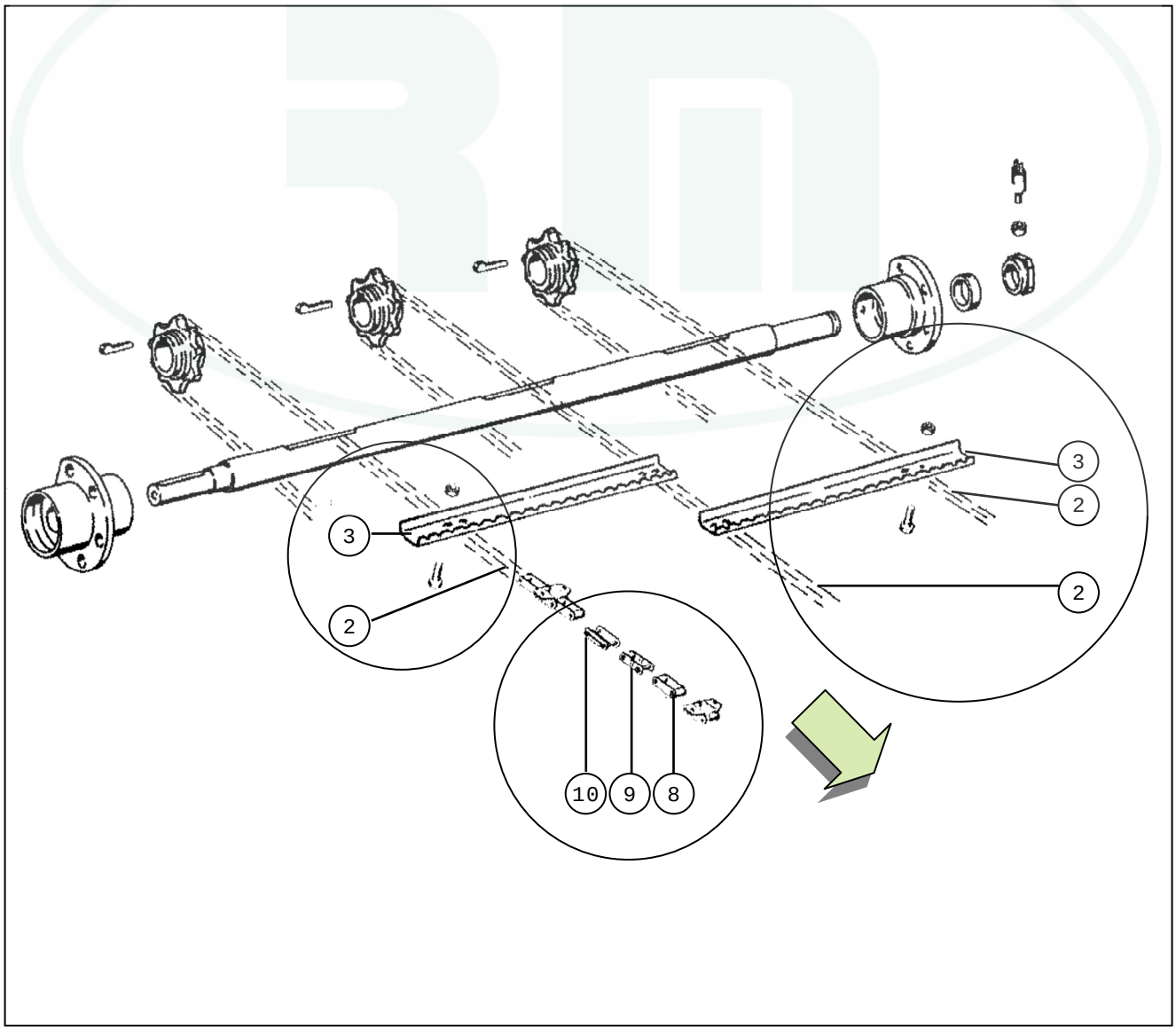

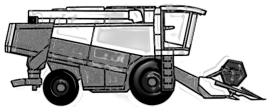

JOHN DEERE

Pos.	Codice Originale	Codice RIMA	Descrizione Description	Applicazione Application	Conf. Pack.
			GUIDE ALIMENTAZIONE *Conveyor Guides*		
12	Z30245	RM21-233	Chain guide		1
	Z37428	RM21-237	Chain guide		1
	Z39550	RM21-239	Chain guide	950-965-1055-1065	1
			ALIMENTAZIONE *Feeder Channel*		
02	AZ14215	RM21-136	Feeder chain	630-730	1
	AZ14216	RM21-137	Feeder chain	630-730	1
	AZ14703	RM21-138	Feeder chain	630-730	1
	AZ18658	RM21-139	Feeder chain	950-970	1
	AZ18684	RM21-140	Feeder chain	970	1
	AZ19650	RM21-141	Feeder chain	630-730	1
	AZ24237	RM21-142	Feeder chain - assemblied	975-1075	1
	AZ24239	RM21-124	Feeder chain	950-985-1075-1085	1
	AZ24240	RM21-183	Feeder chain	950-965-975-1075	1
	AZ26267	RM21-184	Feeder chain - assemblied	985-1085	1
	AZ28843	RM21-186	Feeder chain	1075	1
	AZ28851	RM21-187	Feeder chain - assemblied	1075	1
	AZ28877	RM21-188	Feeder chain - assemblied	1085	1
	AZ30144	RM21-189	Feeder chain - assemblied	955-1055	1
	AZ34232	RM21-194	Feeder chain	1177-1188	1
	AZ34233	RM21-195	Feeder chain	1177	1
	AZ34242	RM21-196	Feeder chain	1177	1
	AZ34243	RM21-197	Feeder chain	1177	1
	AZ34254	RM21-198	Feeder chain - assemblied	1177	1
	AZ34255	RM21-199	Feeder chain - assemblied	1188	1
	AZ34258	RM21-227	Feeder chain - assemblied	1177	1
	AZ34259	RM21-228	Feeder chain - assemblied	1188	1
	AZ44912	RM21-229	Feeder chain	2054/56/58-2064/66	1
	AZ44913	RM21-230	Feeder chain	2054/56/58-2064/66	1
	AZ46327	RM21-231	Feeder chain	2059/56/58-2064/66	1
	AZ46328	RM21-232	Feeder chain	2059/56/58-2064/66	1
03		RM21-236	Chain lath	985-1085-1188	1
	AZ45751	RM21-634	Chain lath	1188	1
	Z33620	RM21-234	Chain lath		1
	Z33621	RM21-235	Chain lath	970-975-1075-1177	1
	Z37346	RM21-635	Chain lath	930-1085-cws	1
	Z38440	RM21-238	Chain lath	950-965-1055-1065	1
	Z62287	RM21-240	Chain lath	2064-2066	1
	Z62288	RM21-241	Chain lath	2054-2058	1

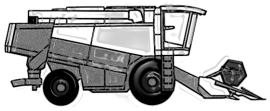

JOHN DEERE

Pos.	Codice Originale	Codice RIMA	Descrizione Description	Applicazione Application	Conf. Pack.
08	AL15479	RM21-242	Chain link		1
09	AL15482	RM21-244	Chain link		1
	AZ24233	RM21-248	Chain link		1
	AZ46340	RM21-251	Chain link		1
10	AL15481	RM21-243	Chain link		1
	AZ15185	RM21-245	Chain link		1
	AZ24231	RM21-246	Chain link		1
	AZ24232	RM21-247	Chain link		1
	AZ34227	RM21-249	Chain link		1
	AZ45049	RM21-250	Chain link		1
	AZ48839	RM21-252	Chain link		1

Notes

JOHN DEERE

Controbattitore - *Treshing Concave*

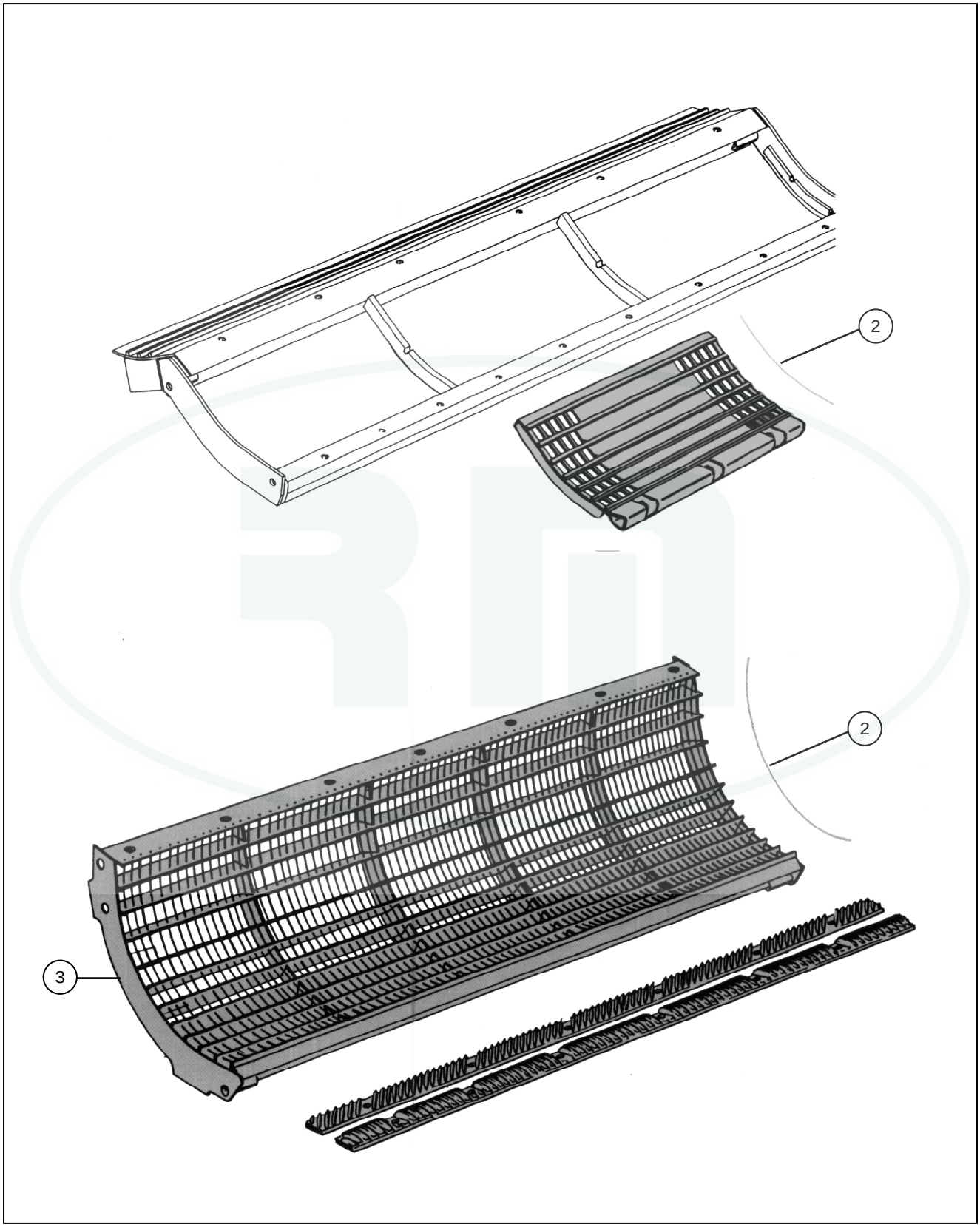

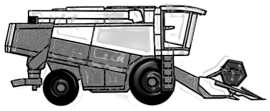

JOHN DEERE

Pos.	Codice Originale	Codice RIMA	Descrizione Description	Applicazione Application	Conf. Pack.
			CONTROBATTITORE *Treshing Concave*		
	AZ42050	RM21-395	Plate		1
	AZ42053	RM21-396	Plate		1
	Z20088	RM21-393	Plate		1
	Z43477	RM21-394	Plate		1
02	Z20064	RM21-294	Wire	diam. 3,5mm.	1
03	AZ17012	RM21-337	Concave	330/430/930/945	1
	AZ34045	RM21-387	Concave	530/630/950/960/1065/1167	1
	AZ34046	RM21-388	Concave	730/970/1075/1177	1
	AZ34047	RM21-390	Concave	AZ26186 - 985/1085/1188	1
	AZ35457	RM21-338	Concave	975/1177	1
	AZ35458	RM21-391	Concave	985/1188	1
	AZ48843	RM21-392	Concave	2254/56/58	1
	AZ48844	RM21-389	Concave	2064/66 - 2264/66	1
	AZ48847	RM21-636	Concave	2064/66 - 2264/66	1
	AZ49452	RM21-637	Concave	2054 - 2258	1
	AZ49453	RM21-638	Concave	2054 - 2258	1
	AZ49457	RM21-639	Concave	2064 - 2266	1
	AZ49458	RM21-640	Concave	2064 - 2066	1
	AZ50653	RM21-641	Concave		1
	AZ50718	RM21-642	Concave	2054 - 2258	1
	AZ50732	RM21-643	Concave	2054 - 2258	1

JOHN DEERE

Battitore – *Treshing Device*

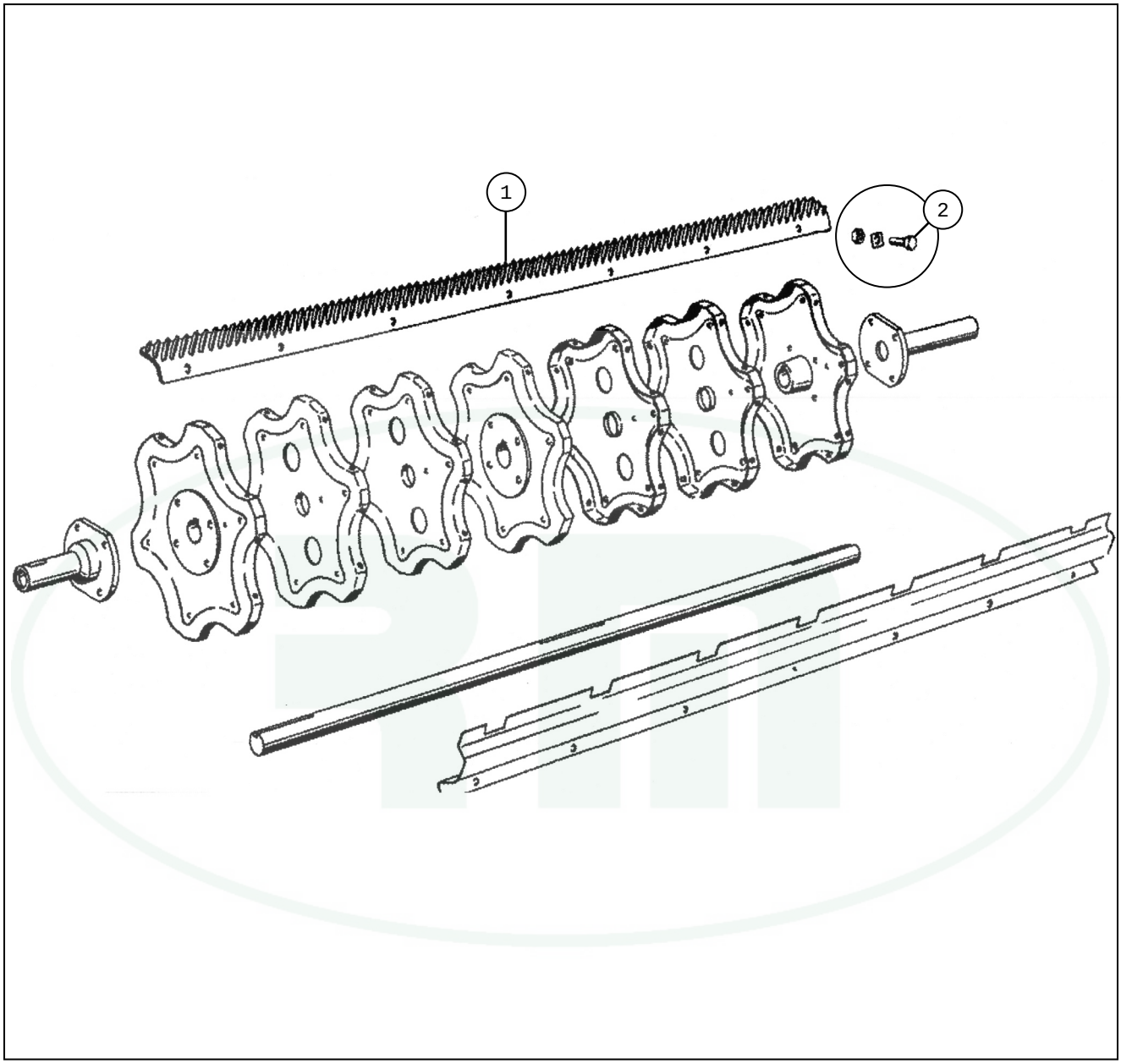

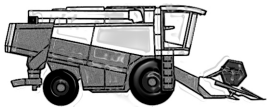

JOHN DEERE

Pos.	Codice Originale	Codice RIMA	Descrizione Description	Applicazione Application	Conf. Pack.
			BATTITORE *Treshing Device*		
01	**AH161415**	**RM21-126**	**Rasp bar set**	AH75104+AH75105	**1**
	AH75104	**RM21-071**	**Rasp bar set**	6602	**1**
	AH75105	**RM21-108**	**Rasp bar set**	6602	**1**
	AZ10688	**RM21-067**	**Rasp bar set**	430 - 945	**1**
	AZ10689	**RM21-083**	**Rasp bar set**	430 - 945	**1**
	AZ10690	**RM21-068**	**Rasp bar set**	630/950/965/1052 1055/1157	**1**
	AZ10691	**RM21-226**	**Rasp bar set**	630/950/965/1052 1055/1157	**1**
	AZ13335	**RM21-069**	**Rasp bar set**	730/970 975/1075/1177	**1**
	AZ13336	**RM21-106**	**Rasp bar set**	730/970 975/1075/1177	**1**
	AZ26343	**RM21-070**	**Rasp bar set**	985/1085/1188	**1**
	AZ26344	**RM21-107**	**Rasp bar set**	985/1085/1188	**1**
	AZ47216	**RM21-180**	**Rasp bar set**	2054/2056/2058	**1**
	AZ47217	**RM21-181**	**Rasp bar set**	2064/2066	**1**
	AZ58904	**RM21-192**	**Rasp bar set**	9540/9680	**1**
	AZ58905	**RM21-102**	**Rasp bar set**	9540/9680	**1**
02	**19M7171**	**RM21-267**	**Bolt**	12X30	**1**
12	**4338954**	**RM21-061**	**Spike tooth**	RISO	**1**
	Z10572	**RM21-053**	**Spike tooth**	254T-H132057	**1**
	Z11542	**RM21-054**	**Spike tooth**	RISO - 254T/Z10572/H132057	**1**

JOHN DEERE

Scuotipaglia – *Straw Walker*

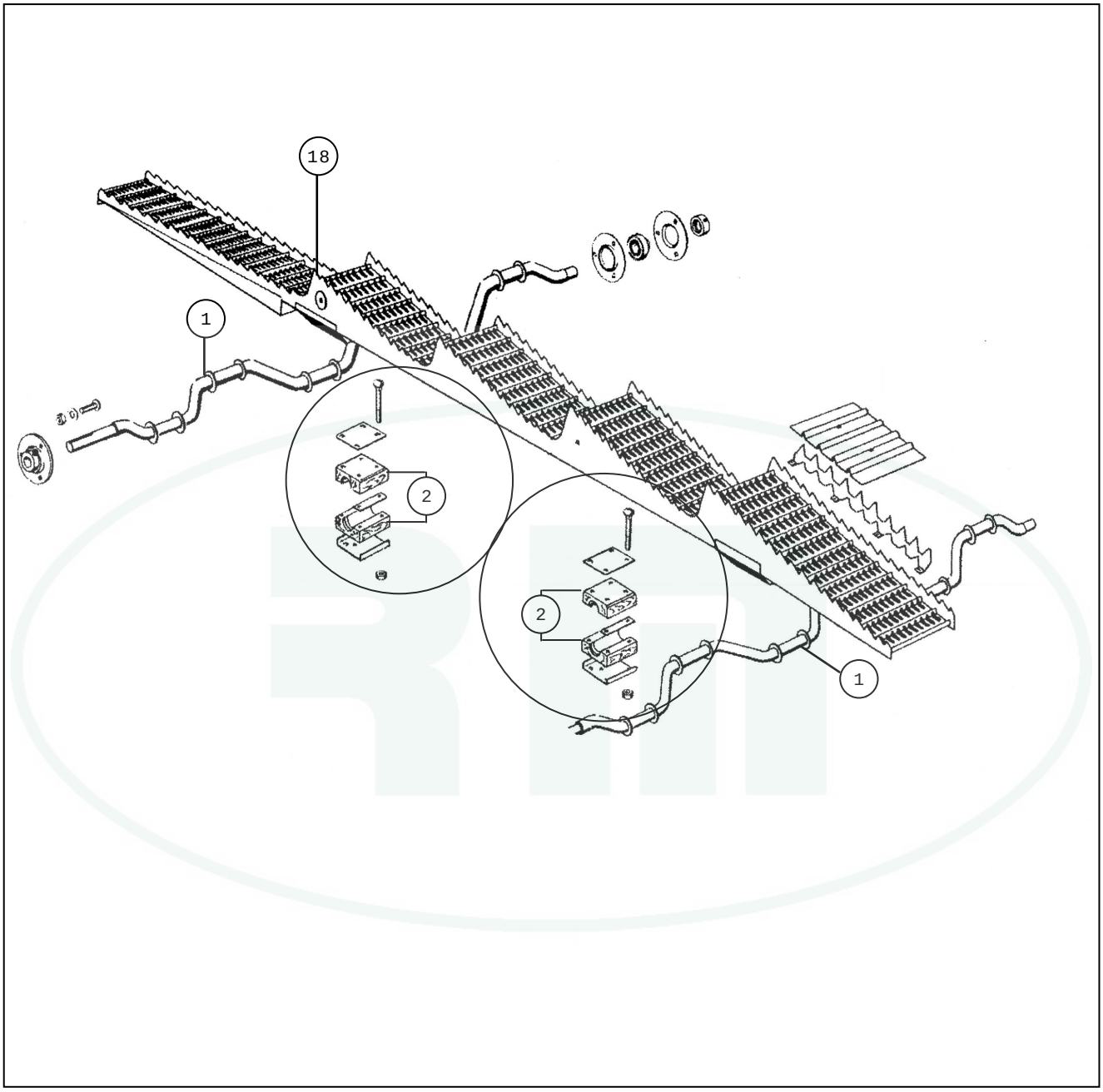

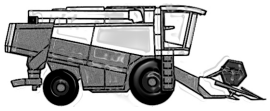

JOHN DEERE

Pos.	Codice Originale	Codice RIMA	Descrizione Description	Applicazione Application	Conf. Pack.
			SCUOTIPAGLIA *Straw Walker*		
	AZ10272	**RM21-646**	**Sprocket**	Serie 900	**1**
	Z10025	**RM21-647**	**Sprocket**	955 - 1158	**1**
	Z11207	**RM21-648**	**Sprocket**	985	**1**
	Z11379	**RM21-645**	**Sprocket**	950 - 1158	**1**
	Z30028	**RM21-644**	**Sprocket**	950 - 1158	**1**
01		**RM21-715**	**Crankshaft**	1085/1188	**1**
		RM21-716	**Crankshaft**	1085/1188	**1**
		RM21-717	**Crankshaft**	2254/2256	**1**
		RM21-718	**Crankshaft**	2264/2266	**1**
	AZ13774	**RM21-100**	**Crankshaft**	960-965	**1**
	AZ21576	**RM21-094**	**Crankshaft**	960-965	**1**
	AZ28016	**RM21-098**	**Crankshaft**	985	**1**
	AZ29300	**RM21-095**	**Crankshaft**	960-965	**1**
	AZ35384	**RM21-096**	**Crankshaft**	AZ36245 - 960 / 965	**1**
	AZ36245	**RM21-097**	**Crankshaft**	960-965	**1**
	AZ42329	**RM21-099**	**Crankshaft**	AZ28107 - 970 / 975	**1**
02	**AZ10037**	**RM21-101**	**Wooden bearing**		**1**
	AZ21612	**RM21-103**	**Wooden bearing**	sost. da AZ31216	**1**
	AZ28804	**RM21-132**	**Wooden bearing**	AZ26907	**1**
	AZ31216	**RM21-109**	**Wooden bearing**		**1**
	AZ31217	**RM21-110**	**Wooden bearing**		**1**
	AZ45586	**RM21-253**	**Wooden bearing**		**1**
	Z61535	**RM21-127**	**Guide**	Z39428	**1**
18	**AZ42420**	**RM21-649**	**Straw walker**	1065/1075/1085	**1**
	AZ42421	**RM21-650**	**Straw walker**	1065/1075/1085	**1**
	AZ42448	**RM21-651**	**Straw walker**	1065/1075/1085	**1**
	AZ42450	**RM21-652**	**Straw walker**	1155/1166/1177	**1**
	AZ42451	**RM21-653**	**Straw walker**	1155/1166/1177	**1**
	AZ44155	**RM21-654**	**Straw walker**	1155/1166/1177	**1**
	AZ44156	**RM21-655**	**Straw walker**	1155/1166/1177	**1**
	AZ44819	**RM21-656**	**Straw walker**	1055/1166/1177/1188	**1**
	AZ49920	**RM21-657**	**Straw walker**	2054 - 2258	**1**

JOHN DEERE

Crivelli – *Sieves*

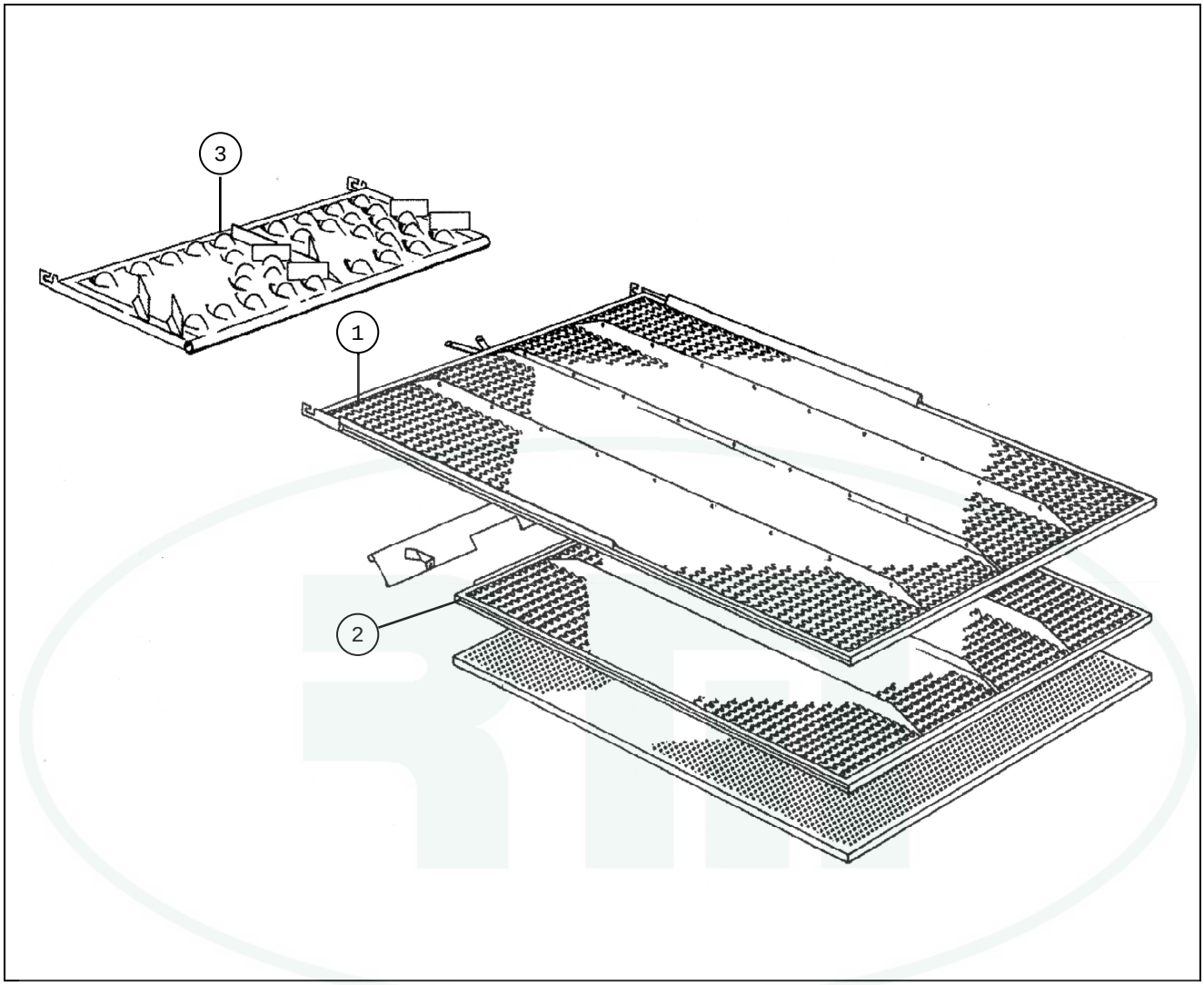

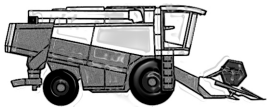

JOHN DEERE

Pos.	Codice Originale	Codice RIMA	Descrizione Description	Applicazione Application	Conf. Pack.
			CRIVELLI *Sieves*		
01		RM21-254	Upper sieve	955-960	1
		RM21-255	Upper sieve	965-1065-1068	1
		RM21-256	Upper sieve	975-1075	1
		RM21-257	Upper sieve	985-1085	1
		RM21-258	Upper sieve	1144-1188	1
		RM21-259	Upper sieve	1157-1166-1169	1
		RM21-260	Upper sieve	1170/1174/1177-CWS1450	1
		RM21-261	Upper sieve	2054-56-58/2254-56-58	1
		RM21-262	Upper sieve	2064-66/2264-66	1
		RM21-263	Upper sieve	CTS9780-WTS9540/60-WTS9580	1
		RM21-264	Upper sieve	9600-WTS9640/60/80	1
		RM21-265	Upper sieve	STS9880	1
02		RM21-266	Lower sieve	955-960	1
		RM21-268	Lower sieve	965-1065-1068	1
		RM21-269	Lower sieve	975-1075	1
		RM21-270	Lower sieve	985-1085	1
		RM21-271	Lower sieve	1144-1188	1
		RM21-272	Lower sieve	1157-1166-1169	1
		RM21-368	Lower sieve	1170/1174/1177-CWS1450	1
		RM21-369	Lower sieve	2054-56-58/2254-56-58	1
		RM21-370	Lower sieve	2064-66/2264-66	1
		RM21-371	Lower sieve	CTS9780-WTS9540/60-WTS9580	1
		RM21-372	Lower sieve	9600-WTS9640/60/80	1
		RM21-373	Lower sieve	STS9880	1
03		RM21-374	Extension	955-960	1
		RM21-375	Extension	965-1065-1068	1
		RM21-376	Extension	975-1075	1
		RM21-377	Extension	985-1085	1
		RM21-378	Extension	1144-1188	1
		RM21-379	Extension	1157-1166-1169	1
		RM21-380	Extension	1170/1174/1177-CWS1450	1
		RM21-381	Extension	2054-56-58/2254-56-58	1
		RM21-384	Extension	2064-66/2264-66	1
		RM21-385	Extension	CTS9780-WTS9540/60-WTS9580	1
		RM21-386	Extension	9600-WTS9640/60/80	1

JOHN DEERE

Elevatore – *Grain Elevator*

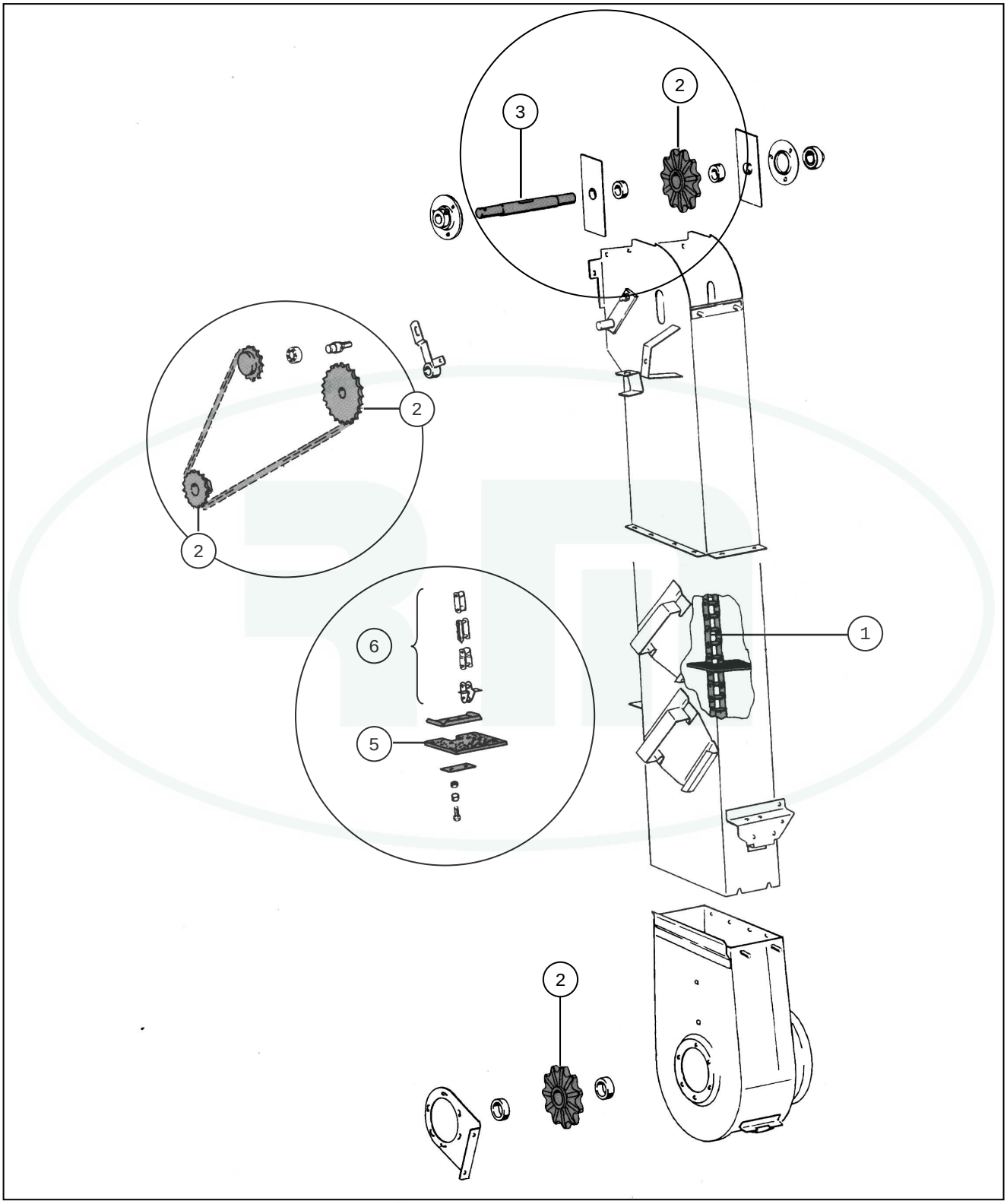

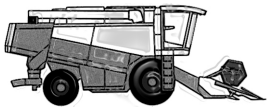

JOHN DEERE

Pos.	Codice Originale	Codice RIMA	Descrizione Description	Applicazione Application	Conf. Pack.
			ELEVATORE *Elevator*		
	Z20728	**RM21-658**	**Plate**		**1**
01	**AZ10367**	**RM21-273**	**Elevator chain**	630/730	**1**
	AZ17182	**RM21-274**	**Chain**		**1**
	AZ22348	**RM21-275**	**Elevator chain**	935/940/952/1052	**1**
	AZ23236	**RM21-276**	**Elevator chain**	950/985	**1**
	AZ24219	**RM21-277**	**Elevator chain**	1075/1085	**1**
	AZ29951	**RM21-278**	**Elevator chain**	1055/1075/1085	**1**
	AZ30734	**RM21-279**	**Chain**		**1**
	AZ31127	**RM21-280**	**Elevator chain**	1068	**1**
	AZ32129	**RM21-281**	**Elevator chain**	1052	**1**
	AZ41078	**RM21-282**	**Elevator chain**	1177/1188	**1**
	AZ44109	**RM21-284**	**Elevator chain**	975/985/1177/1188	**1**
	AZ44110	**RM21-285**	**Elevator chain**	975/985/1177/1188	**1**
	AZ45028	**RM21-286**	**Elevator chain**	2054/2056/2058	**1**
	AZ45029	**RM21-287**	**Elevator chain**	2054/2056/2058	**1**
	AZ46268	**RM21-288**	**Elevator chain**	2054/2056/2058	**1**
	AZ46269	**RM21-289**	**Elevator chain**	2054/2056/2058	**1**
	AZ46272	**RM21-290**	**Elevator chain**	2054/2056/2058	**1**
	AZ46273	**RM21-291**	**Elevator chain**	2054/2056/2058	**1**
02	**AH15303**	**RM21-659**	**Sprocket**	Serie 900/6600/7700	**1**
	AZ10272	**RM21-646**	**Sprocket**	1065/1075/1085	**1**
	AZ28136	**RM21-292**	**Sprocket**	950/975	**1**
	AZ36931	**RM21-660**	**Sprocket**	1065/1075/1085	**1**
	AZ49247	**RM21-663**	**Sprocket**	2056/58 - 2064/66 - 2254/56 - 2264/66	**1**
	AZ49867	**RM21-664**	**Sprocket**	2056/58 - 2064/66 - 2254/56 - 2264/66	**1**
	H128576	**RM21-293**	**Sprocket**	2054/2058/2064/2066	**1**
	Z10997	**RM21-295**	**Sprocket**	diam. 25mm.	**1**
	Z11151	**RM21-665**	**Sprocket**	965 - 1085	**1**
	Z11210	**RM21-296**	**Sprocket**	diam. 30mm.	**1**
	Z11211	**RM21-297**	**Sprocket**	diam. 30mm.	**1**
	Z11212	**RM21-298**	**Sprocket**	diam. 25mm.	**1**
	Z11435	**RM21-662**	**Sprocket**	1065/1075/1085	**1**
	Z12854	**RM21-666**	**Sprocket**	2254 - 2266	**1**
03	**Z33426**	**RM21-300**	**Shaft**	diam. 30mm.	**1**
	Z33445	**RM21-330**	**Shaft**	diam. 25mm.	**1**
05	**Z20781**	**RM21-052**	**Rubber paddle**	152x80	**10**
	Z55621	**RM21-045**	**Rubber paddle**	Z52361	**10**
	Z59053	**RM21-056**	**Rubber paddle**		**10**

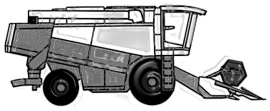

JOHN DEERE

Pos.	Codice Originale	Codice RIMA	Descrizione Description	Applicazione Application	Conf. Pack.
05	Z59062	RM21-161	Rubber paddle		10
	Z66167	RM21-162	Rubber paddle		10
06	AL14207	RM21-331	Chain link		1
	AL142209	RM21-332	Chain link		1
	AL15953	RM21-333	Chain link		1
	AL15954	RM21-334	Chain link		1
	AZ12881	RM21-335	Chain link		1
	AZ12882	RM21-336	Chain link		1
	AZ24233	RM21-248	Chain link		1
	AZ24534	RM21-340	Chain link		1
	AZ28032	RM21-341	Chain link		1

Notes

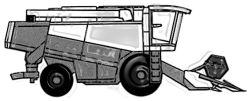

JOHN DEERE

Trinciapaglia - *Straw Chopper*

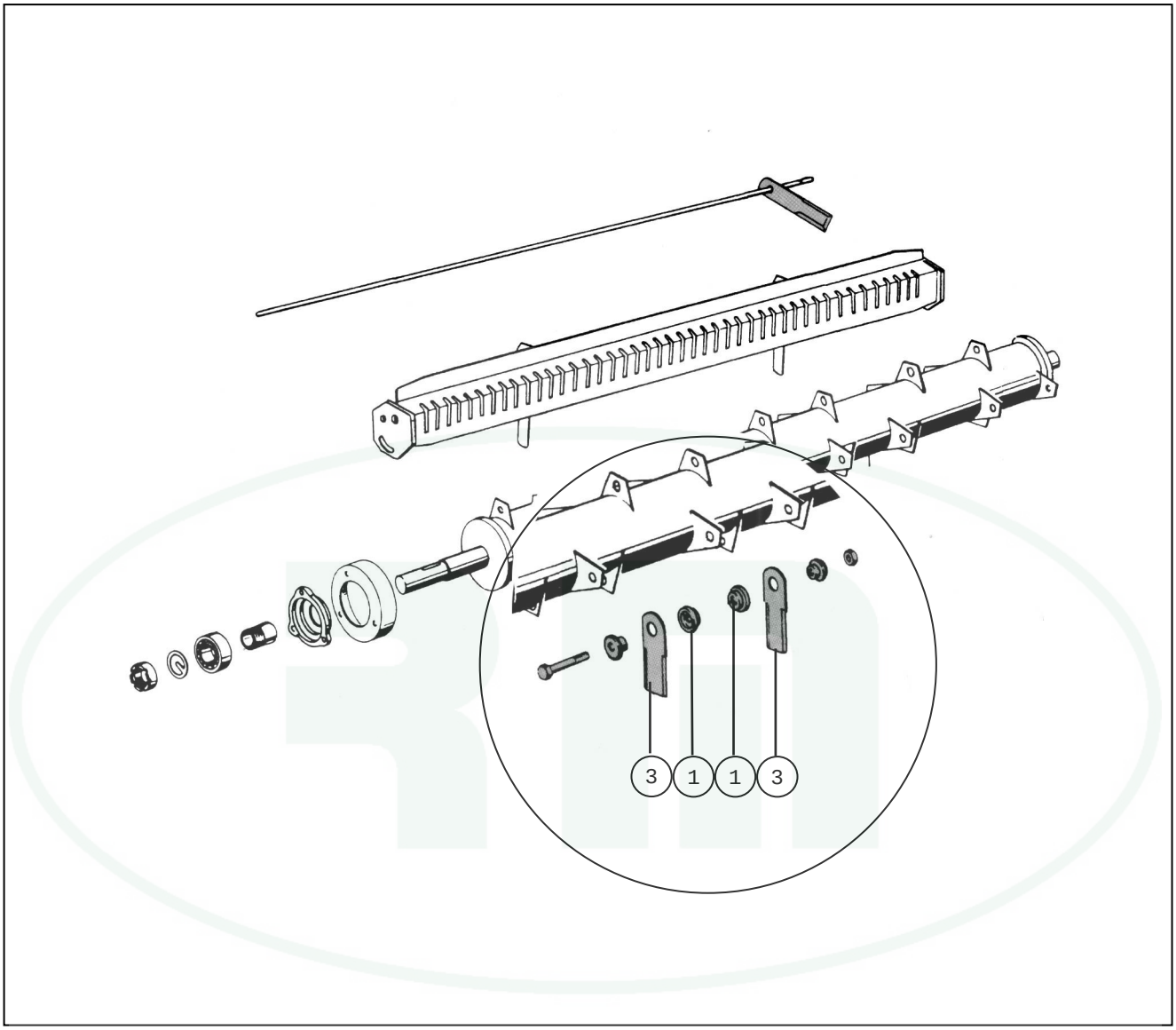

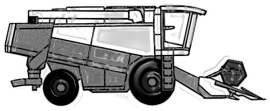

JOHN DEERE

Pos.	Codice Originale	Codice RIMA	Descrizione Description	Applicazione Application	Conf. Pack.
			TRINCIAPAGLIA *Straw Chopper*		
01	Z35216	RM39-041	Bushing		50
	Z35217	RM39-074	Bushing		50
	Z51234	RM39-042	Bushing		50
03	Z35221	RM39-002	Straw chopper blade		20
	Z35241	RM39-022	Straw chopper blade		20
	Z35241D	RM39-023	Straw chopper blade		20
	Z42176	RM39-024	Straw chopper blade		20
	Z45994	RM39-031	Straw chopper blade		20
	Z53454	RM39-004	Straw chopper blade		20
	Z55610	RM39-010	Straw chopper blade		20
	Z55611	RM39-026	Straw chopper blade		20
	Z59020	RM39-029	Straw chopper blade		20
	Z59033	RM39-030	Straw chopper blade		20

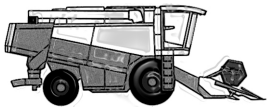

JOHN DEERE

Pos.	Codice Originale	Codice RIMA	Descrizione Description	Applicazione Application	Conf. Pack.
			VARIE *Various*		
	72851	RM21-311	Plate		1
	AE40789/90	RM21-313	Corn Craker 5000 serie		1
	AH12305	RM21-065	Clutch disc	9400	1
	AH19839	RM21-405	Brake disc	347100	1
	AH21385	RM21-166	Brake disc	347200	1
	AH65439	RM21-066	Clutch disc	148300	1
	AH75389	RM21-060	Ball joint	M.15	1
	AH75390	RM21-058	Ball joint	M.11	1
	AH75396	RM21-018	Ball joint		1
	AH75397	RM21-019	Ball joint		1
	AH87899	RM21-059	Ball joint	M.12	1
	AP24917	RM21-407	Pulley		1
	AZ10224	RM21-408	Sprocket		1
	AZ10850	RM21-016	Ball joint		1
	AZ10851	RM21-017	Ball joint		1
	AZ16021	RM21-409	Coupling		1
	AZ16140	RM21-410	Coupling		1
	AZ20844	RM21-165	Brake disc	375300	1
	AZ22756	RM21-411	Coupling		1
	AZ24041	RM21-177	Clutch disc	375400	1
	AZ24042	RM21-190	Clutch disc	375500	1
	AZ24263	RM21-412	Pulley		1
	AZ28775	RM21-089	Ball joint		1
	AZ28776	RM21-090	Ball joint		1
	AZ28777	RM21-091	Ball joint		1
	AZ28778	RM21-092	Ball joint		1
	AZ28787	RM21-413	Spindle		1
	AZ28798	RM21-414	Excentric		1
	AZ36960	RM21-415	Sprocket		1
	AZ39612	RM21-315	Corn cracker 6000 serie		1
	AZ40007	RM21-163	Ball joint		1
	AZ40008	RM21-164	Ball joint		1
	AZ40096	RM21-179	Clutch disc	AZ24248 - 375600	1
	AZ40481	RM21-133	Clutch disc	AZ28508	1
	AZ42393	RM21-416	Coupling		1
	AZ4761374	RM21-316	Counterknife		1
	E.56369	RM21-317	Counterknife		1
	E56857	RM21-318	Counterknife		1
	E62396	RM21-319	Counterknife		1

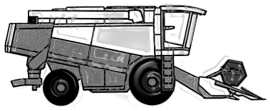

JOHN DEERE

Pos.	Codice Originale	Codice RIMA	Descrizione Description	Applicazione Application	Conf. Pack.
	E73179	RM21-320	Counterknife		1
	E81243	RM21-321	Knife		1
	H10835	RM21-417	Support		1
	H32057	RM21-418	Sprocket		1
	H75179	RM21-419	Sprocket		1
	H75180	RM21-420	Sprocket		1
	P42100	RM21-051	Rubber bearing		10
	P49545	RM21-064	Rubber bearing		10
	Z10011	RM21-421	Sprocket		1
	Z10017	RM21-422	Support		1
	Z10026	RM21-423	Sprocket		1
	Z10027	RM21-424	Sprocket		1
	Z10032	RM21-425	Sprocket		1
	Z10085	RM21-426	Pulley		1
	Z10086	RM21-427	Pulley		1
	Z10117	RM21-428	Sprocket		1
	Z10398	RM21-429	Sprocket		1
	Z10399	RM21-430	Excentric		1
	Z10428	RM21-431	Roller		1
	Z10661	RM21-432	Sprocket		1
	Z10815	RM21-433	Sprocket		1
	Z10816	RM21-434	Sprocket		1
	Z10848	RM21-435	Sprocket		1
	Z10849	RM21-436	Sprocket		1
	Z10882	RM21-437	Sprocket		1
	Z10883	RM21-438	Sprocket		1
	Z10884	RM21-439	Sprocket		1
	Z10885	RM21-440	Sprocket		1
	Z11046	RM21-441	Sprocket		1
	Z11047	RM21-442	Sprocket		1
	Z11048	RM21-443	Sprocket		1
	Z11049	RM21-444	Sprocket		1
	Z11079	RM21-445	Sprocket		1
	Z11168	RM21-446	Pulley		1
	Z11169	RM21-447	Pulley		1
	Z11176	RM21-448	Sprocket		1
	Z11177	RM21-449	Sprocket		1
	Z11209	RM21-450	Sprocket		1
	Z11214	RM21-451	Sprocket		1
	Z11284	RM21-452	Shaft		1
	Z11382	RM21-453	Sprocket		1

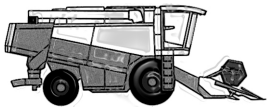

JOHN DEERE

Pos.	Codice Originale	Codice RIMA	Descrizione Description	Applicazione Application	Conf. Pack.
	Z11409	RM21-454	Sprocket		1
	Z11442	RM21-455	Pulley		1
	Z11514	RM21-456	Sprocket		1
	Z11515	RM21-457	Sprocket		1
	Z11540	RM21-458	Sprocket		1
	Z11541	RM21-459	Sprocket		1
	Z11544	RM21-460	Sprocket		1
	Z11545	RM21-461	Sprocket		1
	Z11546	RM21-462	Sprocket		1
	Z11604	RM21-463	Sprocket		1
	Z11617	RM21-464	Sprocket		1
	Z11689	RM21-465	Sprocket		1
	Z11690	RM21-466	Sprocket		1
	Z11691	RM21-467	Sprocket		1
	Z11694	RM21-468	Sprocket		1
	Z11699	RM21-469	Sprocket		1
	Z21487	RM21-479	Sprocket		1
	Z30508	RM21-470	Shaft		1
	Z30556	RM21-471	Sprocket		1
	Z30557	RM21-472	Sprocket		1
	Z30558	RM21-473	Sprocket		1
	Z31218	RM21-474	Shaft		1
	Z32102	RM21-475	Shaft		1
	Z32893	RM21-476	Shaft		1
	Z33437	RM21-477	Shaft		1
	Z33438	RM21-478	Shaft		1
	Z56689	RM21-324	Knife		1
	Z63136	RM21-326	Knife		1

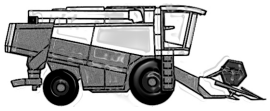

JOHN DEERE

Pos.	Codice Originale	Codice RIMA	Descrizione Description	Applicazione Application	Conf. Pack.
			CINGHIE *Belts*		
	A1230R		**Belt**		**1**
	A29343		**Belt**		**1**
	A4287R		**Belt**		**1**
	A4897R		**Belt**		**1**
	AC13115		**Belt**		**1**
	AE24122		**Belt**		**1**
	AE28944		**Belt**		**1**
	AE29066		**Belt**		**1**
	AE31453		**Belt**	800 830	**1**
	AE31988		**Belt**		**1**
	AE39758		**Belt**		**1**
	AE40984		**Belt**		**1**
	AE45931		**Belt**		**1**
	AH120918		**Belt**		**1**
	AH127866		**Belt**	9400 9500 9600 CTS (US) CTS EUROPE CTS	**1**
	AH131960		**Belt**	9400 9500 9600	**1**
	AH139436		**Belt**	9400 9500 9501 9540 / 9560 / 9580 (EUROPE	**1**
	AH140623		**Belt**	CTS (US) CTS EUROPE	**1**
	AH14175		**Belt**		**1**
	AH19544		**Belt**		**1**
	AH19545		**Belt**		**1**
	AH19550		**Belt**		**1**
	AH21300		**Belt**		**1**
	AH21301		**Belt**	6600 6600 SIDEHILL 7700	**1**
	AH62667		**Belt**		**1**
	AH62729		**Belt**		**1**
	AH63075		**Belt**		**1**
	AH75079		**Belt**		**1**
	AH75638		**Belt**	1188 - 1188 HYDRO 4 6600 7700	**1**
	AH76154		**Belt**	4400 4420 6600 7700	**1**
	AH79627		**Belt**	6602 6622	**1**
	AH79671		**Belt**		**1**
	AH80500		**Belt**	3300 4400 4420	**1**
	AH80503		**Belt**	6600 7700	**1**
	AH80505		**Belt**	6600 7700	**1**
	AH84633		**Belt**	6600 6620 7700 7720 7722 8820	**1**
	AH87127		**Belt**	6600 SIDEHILL 6620 7700 7720	**1**
	AH87197		**Belt**	4400 4420	**1**
	AH89436		**Belt**	6620 7700	**1**

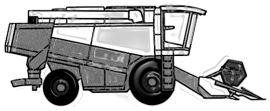

JOHN DEERE

Pos.	Codice Originale	Codice RIMA	Descrizione Description	Applicazione Application	Conf. Pack.
	AH96300		**Belt**	6620 6622 7720 7722 8820	**1**
	AH96333		**Belt**	7722 8820 9960	**1**
	AH98052		**Belt**	3300 4400 4420	**1**
	AM100465		**Belt**		**1**
	AN190205		**Belt**	9910 9920 9930	**1**
	AN190948		**Belt**	9940 9950	**1**
	AN194750		**Belt**	9960	**1**
	AN194751		**Belt**	9960	**1**
	AR41576		**Belt**	7700	**1**
	AR53099		**Belt**		**1**
	AR56638		**Belt**		**1**
	AR57266		**Belt**		**1**
	AR72036		**Belt**	1065 / 1068 1072 / 1075 / 1075 HYDRO 4 115	**1**
	AR86496		**Belt**	9940	**1**
	AR87671		**Belt**		**1**
	AT23317		**Belt**	9900	**1**
	AT28030		**Belt**	1055 1072 / 1075 / 1075 HYDRO 4 1155 / 115	**1**
	AZ22534		**Belt**		**1**
	AZ22914		**Belt**	1072 / 1075 / 1075 HYDRO 4 1085 / 1085 HY	**1**
	AZ30692		**Belt**		**1**
	AZ30881		**Belt**		**1**
	AZ32190		**Belt**		**1**
	AZ33790		**Belt**		**1**
	AZ34099		**Belt**		**1**
	AZ35635		**Belt**	4425	**1**
	AZ37807		**Belt**	1166 / 1166 HYDRO 4 1174 - 1174 HYDRO 4	**1**
	AZ40077		**Belt**	1065 / 1068 1188 - 1188 HYDRO 4	**1**
	AZ45026		**Belt**		**1**
	AZ46283		**Belt**		**1**
	AZ51312		**Belt**		**1**
	CA20514		**Belt**	985	**1**
	CA20518		**Belt**	985	**1**
	CA22534		**Belt**		**1**
	CC19065		**Belt**		**1**
	CM15519		**Belt**		**1**
	CQ03265		**Belt**	1170	**1**
	CQ03478		**Belt**	1170	**1**
	CQ03492		**Belt**	1170	**1**
	CQ08239		**Belt**	1170	**1**
	CQ17755		**Belt**	1170	**1**
	CQ28344		**Belt**	1170	**1**

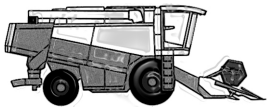

JOHN DEERE

Pos.	Codice Originale	Codice RIMA	Descrizione Description	Applicazione Application	Conf. Pack.
	E35829		**Belt**	800 830	**1**
	E37821		**Belt**	880	**1**
	E46113		**Belt**		**1**
	E48060		**Belt**	800 830	**1**
	E48063		**Belt**	800 830	**1**
	E50873		**Belt**	2250 2270 / 2280	**1**
	E50973		**Belt**	2270 / 2280 2320 2420 800 830	**1**
	E52878		**Belt**	2250	**1**
	E53936		**Belt**	2250	**1**
	E56262		**Belt**	2320 2420 3430	**1**
	E57428		**Belt**	2250 2320 2360 2420 800 830	**1**
	E58967		**Belt**	2250 2270 / 2280	**1**
	E60212		**Belt**	3300 4400 6620 7720	**1**
	E61326		**Belt**	9920 9930 CTS (US) CTS EUROPE CTS II E	**1**
	E63031		**Belt**	3300 4400 4420	**1**
	E63457		**Belt**	2320 2420	**1**
	E69465		**Belt**		**1**
	E70675		**Belt**		**1**
	E72435		**Belt**	3830	**1**
	E75596		**Belt**	3830	**1**
	E79907		**Belt**		**1**
	H101352		**Belt**	4420	**1**
	H101436		**Belt**	6620 6622 7720 7721 8820 9400	**1**
	H101469		**Belt**	6620 6622 7720 8820	**1**
	H101813		**Belt**	4420 CTS (US) CTS EUROPE	**1**
	H103334		**Belt**		**1**
	H103344		**Belt**	6620 6622 7720 7721 8820	**1**
	H10375		**Belt**		**1**
	H108175		**Belt**	6600 SIDEHILL 6620 6622 7700 7720 7722 8	**1**
	H108668		**Belt**	6600 6620 6622 7700	**1**
	H108669		**Belt**	7720 7721 8820	**1**
	H110085		**Belt**	CTS 9780 CTS II EUROPE	**1**
	H110300		**Belt**	6620 6622 7720 8820	**1**
	H110375		**Belt**	6620 6622 7720 7721 8820	**1**
	H110921		**Belt**	6620 7720 8820	**1**
	H111519		**Belt**	6620 7720 7722	**1**
	H112421		**Belt**	6620 6622 7720 7721 8820	**1**
	H113565		**Belt**	6620 7720	**1**
	H113749		**Belt**	6600 6620 6622 7700 7720 8820	**1**
	H115759		**Belt**	9400 9500 9501 9600 CTS (US) CTS EUROP	**1**
	H115881		**Belt**	9400 9500 9501 9540 / 9560 / 9580 (EUROPE	**1**

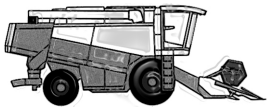

JOHN DEERE

Pos.	Codice Originale	Codice RIMA	Descrizione Description	Applicazione Application	Conf. Pack.
	H116422		**Belt**	6620	**1**
	H118618		**Belt**	9400 9500 9600 CTS (US) CTS EUROPE CTS	**1**
	H118730		**Belt**	6620 6622 7720 7721 8820	**1**
	H122189		**Belt**	7721	**1**
	H125380		**Belt**	6600 6620 7700 7720 8820 9400 9500 9501 9	**1**
	H125381		**Belt**	9500 9501 9600	**1**
	H125565		**Belt**	9400 9500 9600	**1**
	H125711		**Belt**	9400 9500 9600 CTS (US) CTS EUROPE	**1**
	H126345		**Belt**	9400 9500 9501 9600 CTS (US) CTS 9780 CT	**1**
	H128010		**Belt**	9400 9500 9501 9600 CTS (US) CTS 9780 CT	**1**
	H128234		**Belt**	9500 9501 9600	**1**
	H131169		**Belt**	9400 9500 9501 9600 CTS (US) CTS EUROP	**1**
	H132665		**Belt**		**1**
	H132808		**Belt**	9500 9600	**1**
	H132809		**Belt**	9400	**1**
	H133577		**Belt**	9600	**1**
	H134216		**Belt**	9400 9500 CTS (US) CTS EUROPE	**1**
	H134344		**Belt**	9500 9600	**1**
	H134437		**Belt**	9500 9600 CTS (US) CTS EUROPE CTS II E	**1**
	H134772		**Belt**	9400	**1**
	H135417		**Belt**		**1**
	H135458		**Belt**	9600	**1**
	H136881		**Belt**	6622	**1**
	H137207		**Belt**	6600 SIDEHILL 6620 7700 7720 8820	**1**
	H137264		**Belt**	9400 9500 9501 9600 CTS (US) CTS EUROP	**1**
	H137670		**Belt**	9400 9500 9600 CTS 9780	**1**
	H137830		**Belt**	9400 9500 9501	**1**
	H138762		**Belt**	3300 4400 4420	**1**
	H139963		**Belt**	CTS (US) CTS 9780 CTS EUROPE CTS II EU	**1**
	H140160		**Belt**	9400 9500 9501 9600 CTS (US) CTS EUROP	**1**
	H140404		**Belt**	9400 9500 9501 9600 CTS (US) CTS EUROP	**1**
	H140404		**Belt**	9400 9500 9501 9600 CTS (US) CTS EUROP	**1**
	H141166		**Belt**	9600 CTS 9780	**1**
	H141167		**Belt**	9400 9500 CTS (US) CTS EUROPE	**1**
	H141417		**Belt**	CTS (US) CTS EUROPE	**1**
	H141429		**Belt**	CTS (US) CTS EUROPE CTS II EUROPE	**1**
	H143700		**Belt**	CTS (US) CTS EUROPE CTS II EUROPE	**1**
	H143869		**Belt**	9400 9500 9600	**1**
	H145026		**Belt**	9400	**1**
	H145158		**Belt**	CTS (US) CTS 9780 CTS EUROPE CTS II EU	**1**
	H146636		**Belt**	9540 / 9560 / 9580 (EUROPE) 9640 / 9660 / 9	**1**

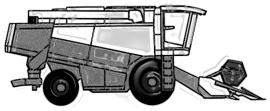

JOHN DEERE

Pos.	Codice Originale	Codice RIMA	Descrizione Description	Applicazione Application	Conf. Pack.
	H151952		**Belt**	CTS 9780 CTS II EUROPE	**1**
	H152146		**Belt**	9540 / 9560 / 9580 (EUROPE) 9640 / 9660 / 9	**1**
	H152180		**Belt**	CTS 9780 CTS II EUROPE	**1**
	H153297		**Belt**	CTS (US) CTS EUROPE	**1**
	H160171		**Belt**	CTS II EUROPE	**1**
	H160406		**Belt**	CTS 9780 CTS II EUROPE	**1**
	H161648		**Belt**	CTS II EUROPE	**1**
	H161796		**Belt**	CTS II EUROPE	**1**
	H162541		**Belt**	CTS II EUROPE	**1**
	H162629		**Belt**	CTS (US) CTS EUROPE CTS II EUROPE	**1**
	H163515		**Belt**	CTS II EUROPE	**1**
	H181742		**Belt**		**1**
	H20407		**Belt**	3300 4400 4420	**1**
	H21925		**Belt**	7722	**1**
	H23817		**Belt**	3300 4400 4420	**1**
	H23927		**Belt**	6600 6620 6622 7700 7720 7722 8820	**1**
	H23950		**Belt**	6600 6602 6622 7700 7721	**1**
	H24984		**Belt**		**1**
	H25645		**Belt**	330 / 430	**1**
	H26858		**Belt**	6600 7700	**1**
	H27433		**Belt**	6600 6602 6620 6622 7700 7720 7721 8820	**1**
	H28705		**Belt**		**1**
	H29528		**Belt**	880	**1**
	H33142		**Belt**		**1**
	H33885		**Belt**	6622	**1**
	H35055		**Belt**		**1**
	H63772		**Belt**	2250 3300	**1**
	H64206		**Belt**		**1**
	H75565		**Belt**	6602	**1**
	H75816		**Belt**	3300 4400 4420	**1**
	H75846		**Belt**	6600 6620 7700 7720	**1**
	H75847		**Belt**	4400 4420 6600	**1**
	H75911		**Belt**	3300	**1**
	H76028		**Belt**	3300 4400 4420	**1**
	H76030		**Belt**	6600 6602 6620 6622 7700 7720 7721 8820	**1**
	H76136		**Belt**	3300 4400 4420	**1**
	H76150		**Belt**	6600 SIDEHILL 7700	**1**
	H76273		**Belt**	6602	**1**
	H77010		**Belt**	6600 6602 6620 6622 7700 7720 7721 8820	**1**
	H77019		**Belt**	6600 6602 7700	**1**
	H77683		**Belt**	3300 4400 4420 6600 7700	**1**

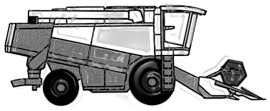

JOHN DEERE

Pos.	Codice Originale	Codice RIMA	Descrizione Description	Applicazione Application	Conf. Pack.
	H77765		**Belt**	6600 6620 6622 7700 7720 7721	**1**
	H77766		**Belt**	6600 6620 6622 7700 7720 7721 8820	**1**
	H79235		**Belt**	1072 / 1075 / 1075 HYDRO 4 1085 / 1085 HY	**1**
	H79236		**Belt**	1085 / 1085 HYDRO 4 1088 1177 - 1177 HY	**1**
	H79237		**Belt**	6602	**1**
	H79285		**Belt**	3300 4400 4420	**1**
	H79787		**Belt**	3300 4400 4420	**1**
	H79789		**Belt**	6600 7700	**1**
	H79796		**Belt**	6600 6620 7700 7720 8820	**1**
	H80103		**Belt**	6600 6602 7700	**1**
	H80159		**Belt**	3300 4400 4420	**1**
	H80726		**Belt**	3300 4400 4420	**1**
	H80896		**Belt**	3300 4400 6600 7700	**1**
	H80897		**Belt**	3300 7700	**1**
	H81222		**Belt**	4400 4420 6602 6620 6622 7720 8820	**1**
	H81378		**Belt**	6602	**1**
	H81524		**Belt**	6602 6622	**1**
	H81742		**Belt**	3300	**1**
	H82479		**Belt**	4400	**1**
	H82724		**Belt**	4400 4420 6600 6602 7700	**1**
	H83077		**Belt**	6600 7700	**1**
	H83078		**Belt**	3300 4400	**1**
	H84236		**Belt**		**1**
	H84421		**Belt**	6602	**1**
	H84424		**Belt**	6600 SIDEHILL 7700	**1**
	H84425		**Belt**	6602	**1**
	H84441		**Belt**	6600 6620 7700	**1**
	H84462		**Belt**	6600 6600 SIDEHILL 7700	**1**
	H84745		**Belt**	7700	**1**
	H86039		**Belt**	3300 4400 4420 6600 7700	**1**
	H86060		**Belt**	3300 4400 6602	**1**
	H86061		**Belt**	6600 7700	**1**
	H86259		**Belt**	3300 3830 4400 4420 6600 6620 7700 7720 8	**1**
	H86271		**Belt**	3300 4400 4420 6600 7700 7720 7722 8820	**1**
	H86272		**Belt**	6600 6620 6622	**1**
	H86273		**Belt**	3300 6620 6622 7700 7720 7722 8820	**1**
	H86274		**Belt**	7721	**1**
	H86275		**Belt**	4400 4420 6620 6622 7720 8820	**1**
	H87459		**Belt**	6600 SIDEHILL 7700	**1**
	H87648		**Belt**	3300 4400	**1**
	H88576		**Belt**	6600	**1**

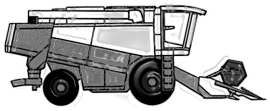

JOHN DEERE

Pos.	Codice Originale	Codice RIMA	Descrizione Description	Applicazione Application	Conf. Pack.
	H91814		**Belt**		**1**
	H94373		**Belt**	4420	**1**
	H94508		**Belt**	7721	**1**
	H96248		**Belt**		**1**
	H96408		**Belt**	6620 7700 7720	**1**
	H96414		**Belt**	6620 7720 7721 8820	**1**
	H96421		**Belt**	7721 8820	**1**
	H96422		**Belt**	6620 6622 7720 7721 8820	**1**
	H96423		**Belt**	6600 6620 6622 7700 7720	**1**
	H97929		**Belt**	6620 7720 7722 8820	**1**
	HAN1177		**Belt**	7722	**1**
	HAN1220		**Belt**	7722	**1**
	L4276N		**Belt**	9400	**1**
	M1900T		**Belt**	9910 9920 9930	**1**
	M41592		**Belt**	9930	**1**
	M41668		**Belt**		**1**
	M41960		**Belt**		**1**
	M42485		**Belt**	9950	**1**
	M74747		**Belt**		**1**
	M82462		**Belt**		**1**
	M82720		**Belt**	9960	**1**
	M84136		**Belt**		**1**
	M84223		**Belt**		**1**
	M95728		**Belt**	CTS (US) CTS EUROPE CTS II EUROPE	**1**
	N110085		**Belt**	6600 6602 7700 9400 9500 9501 9540 / 9560 /	**1**
	N111527		**Belt**	9900 9910 9920 9930	**1**
	N113642		**Belt**	9900	**1**
	N115368		**Belt**	9900	**1**
	N117398		**Belt**	9900 9910	**1**
	N117674		**Belt**	3430 3830 9920 9930	**1**
	N121116		**Belt**	9900 9910 9920 9930	**1**
	N124460		**Belt**	9900	**1**
	N129368		**Belt**	9910 9920 9930	**1**
	N150864		**Belt**	3830	**1**
	N190043		**Belt**	9940 9950	**1**
	N193822		**Belt**	9940 9950 9960	**1**
	N31649		**Belt**	9940 9950	**1**
	P40058		**Belt**	530 / 630 730 950 / 960 / 970	**1**
	P41508		**Belt**	6602	**1**
	P46553		**Belt**	4400 4420 6600 7700	**1**
	P47885		**Belt**	9500 9501 9600	**1**

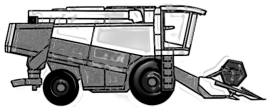

JOHN DEERE

Pos.	Codice Originale	Codice RIMA	Descrizione Description	Applicazione Application	Conf. Pack.
	P49415		**Belt**	6620 7720	**1**
	P49604		**Belt**	CTS (US) CTS EUROPE CTS II EUROPE	**1**
	R123451		**Belt**	1170	**1**
	R52507		**Belt**	6602 7700	**1**
	R69393		**Belt**		**1**
	R70871		**Belt**	7700	**1**
	R71459		**Belt**		**1**
	R71602		**Belt**	9940	**1**
	R71603		**Belt**	6600 SIDEHILL 6620 6622 7700 7720 8820	**1**
	R73189		**Belt**	9950 9960	**1**
	R73784		**Belt**	3430	**1**
	R73785		**Belt**		**1**
	R73789		**Belt**		**1**
	R76835		**Belt**		**1**
	R81271		**Belt**		**1**
	R82174		**Belt**		**1**
	R87151		**Belt**		**1**
	R87152		**Belt**		**1**
	R87153		**Belt**		**1**
	R87154		**Belt**		**1**
	R91407		**Belt**		**1**
	R97758		**Belt**	2270 / 2280 2420	**1**
	RE29018		**Belt**	9950 9960	**1**
	RE41942		**Belt**	9960	**1**
	RE44538		**Belt**	9400	**1**
	RE52908		**Belt**		**1**
	S17044		**Belt**	1170	**1**
	SA00601		**Belt**	1170	**1**
	T10552		**Belt**	9960	**1**
	T12042		**Belt**	6600 7700	**1**
	T20334		**Belt**	1032 / 1042 / 1052 1155 / 1157 / 1158 930 / 94	**1**
	T23505		**Belt**	330 / 430 530 / 630 950 / 960 / 970	**1**
	T25130		**Belt**	2360	**1**
	T31710		**Belt**		**1**
	T32517		**Belt**	6620 7720 7722 8820	**1**
	W35598		**Belt**	2360	**1**
	W35600		**Belt**	2360	**1**
	W35774		**Belt**	2360	**1**
	W35813		**Belt**	2360	**1**
	Z20459		**Belt**	1155 / 1157 / 1158 330 / 430 530 / 630 730 93	**1**
	Z20460		**Belt**	1032 / 1042 / 1052 330 / 430	**1**

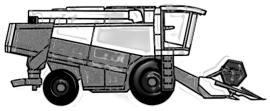

JOHN DEERE

Pos.	Codice Originale	Codice RIMA	Descrizione Description	Applicazione Application	Conf. Pack.
	Z20562		**Belt**	330 / 430 530 / 630 730 930 / 940 950 / 960 / 9	**1**
	Z20703		**Belt**	330 / 430 530 / 630 730 930 / 940 950 / 960 / 9	**1**
	Z20743		**Belt**	1032 / 1042 / 1052 1055 1155 / 1157 / 1158 33	**1**
	Z20823		**Belt**	1072 / 1075 / 1075 HYDRO 4 1166 / 1166 HY	**1**
	Z21137		**Belt**	330 / 430	**1**
	Z21171		**Belt**	330 / 430 530 / 630	**1**
	Z21254		**Belt**	330 / 430 530 / 630 730	**1**
	Z21398		**Belt**	330 / 430 530 / 630	**1**
	Z21400		**Belt**	330 / 430 530 / 630 730 930 / 940 950 / 960 / 9	**1**
	Z21401		**Belt**	330 / 430	**1**
	Z21402		**Belt**	330 / 430	**1**
	Z21403		**Belt**	1055 530 / 630 950 / 960 / 970 952 955	**1**
	Z21500		**Belt**	530 / 630 730 965 / 965 HYDRO 4 / 975	**1**
	Z21501		**Belt**	1032 / 1042 / 1052 1055 1065 / 1068 1072 / 10	**1**
	Z22208		**Belt**	530 / 630 730	**1**
	Z22648		**Belt**	730	**1**
	Z23693		**Belt**	1032 / 1042 / 1052 330 / 430 930 / 940	**1**
	Z23752		**Belt**	330 / 430	**1**
	Z24833		**Belt**	965 / 965 HYDRO 4 / 975	**1**
	Z25473		**Belt**	930 / 940 950 / 960 / 970	**1**
	Z25670		**Belt**		**1**
	Z28458		**Belt**	930 / 940 950 / 960 / 970	**1**
	Z29197		**Belt**		**1**
	Z29962		**Belt**	950 / 960 / 970	**1**
	Z30130		**Belt**	6620 7720 930 / 940 950 / 960 / 970 952 955 9	**1**
	Z30593		**Belt**	930 / 940 950 / 960 / 970 952 955	**1**
	Z30692		**Belt**	930 / 940 950 / 960 / 970 952 955 985	**1**
	Z30881		**Belt**		**1**
	Z30920		**Belt**	930 / 940 950 / 960 / 970	**1**
	Z31191		**Belt**	1032 / 1042 / 1052 930 / 940	**1**
	Z31283		**Belt**	1032 / 1042 / 1052 1055 1155 / 1157 / 1158 93	**1**
	Z31367		**Belt**	930 / 940	**1**
	Z31816		**Belt**	930 / 940	**1**
	Z32041		**Belt**	1088 1166 / 1166 HYDRO 4 1169 / 1169 HYD	**1**
	Z32173		**Belt**	950 / 960 / 970	**1**
	Z32190		**Belt**	1032 / 1042 / 1052 1055 1065 / 1068 1072 / 10	**1**
	Z32568		**Belt**	952 955	**1**
	Z32883		**Belt**	930 / 940 955	**1**
	Z33368		**Belt**	965 / 965 HYDRO 4 / 975 985	**1**
	Z33605		**Belt**	985	**1**
	Z33774		**Belt**	1032 / 1042 / 1052 1055 1065 / 1068 1072 / 10	**1**

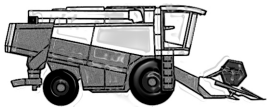

JOHN DEERE

Pos.	Codice Originale	Codice RIMA	Descrizione Description	Applicazione Application	Conf. Pack.
	Z33790		**Belt**	1065 / 1068 1072 / 1075 / 1075 HYDRO 4 108	**1**
	Z33967		**Belt**	1065 / 1068 1072 / 1075 / 1075 HYDRO 4 116	**1**
	Z34099		**Belt**	1065 / 1068 1072 / 1075 / 1075 HYDRO 4 108	**1**
	Z34121		**Belt**	1055 1155 / 1157 / 1158 952 955	**1**
	Z34405		**Belt**	1032 / 1042 / 1052 1055 1065 / 1068 1072 / 10	**1**
	Z34786		**Belt**	1065 / 1068 1072 / 1075 / 1075 HYDRO 4 108	**1**
	Z34828		**Belt**	1065 / 1068 1072 / 1075 / 1075 HYDRO 4 108	**1**
	Z35357		**Belt**		**1**
	Z35358		**Belt**	1170	**1**
	Z35965		**Belt**	1055 1065 / 1068 1072 / 1075 / 1075 HYDRO	**1**
	Z36120		**Belt**	1032 / 1042 / 1052	**1**
	Z36376		**Belt**		**1**
	Z36813		**Belt**	1032 / 1042 / 1052 930 / 940	**1**
	Z36949		**Belt**		**1**
	Z37191		**Belt**	1072 / 1075 / 1075 HYDRO 4	**1**
	Z37192		**Belt**	1072 / 1075 / 1075 HYDRO 4 985	**1**
	Z37473		**Belt**	1072 / 1075 / 1075 HYDRO 4 1085 / 1085 HY	**1**
	Z37476		**Belt**		**1**
	Z38148		**Belt**	1072 / 1075 / 1075 HYDRO 4 985	**1**
	Z38149		**Belt**	1072 / 1075 / 1075 HYDRO 4 985	**1**
	Z38186		**Belt**	1032 / 1042 / 1052 1055 1065 / 1068 1072 / 10	**1**
	Z38692		**Belt**	1085 / 1085 HYDRO 4 1088 1174 - 1174 HY	**1**
	Z38697		**Belt**	1085 / 1085 HYDRO 4	**1**
	Z38698		**Belt**		**1**
	Z38702		**Belt**	1085 / 1085 HYDRO 4	**1**
	Z38703		**Belt**	1085 / 1085 HYDRO 4	**1**
	Z38704		**Belt**	1085 / 1085 HYDRO 4 1088 1155 / 1157 / 115	**1**
	Z39312		**Belt**	1055 1065 / 1068 1155 / 1157 / 1158 1169 / 11	**1**
	Z39313		**Belt**	1032 / 1042 / 1052 1055 1065 / 1068 1072 / 10	**1**
	Z39314		**Belt**	1065 / 1068 1072 / 1075 / 1075 HYDRO 4 116	**1**
	Z40077		**Belt**	1088	**1**
	Z41178		**Belt**	1032 / 1042 / 1052 1055 1065 / 1068 1072 / 10	**1**
	Z41563		**Belt**	1085 / 1085 HYDRO 4	**1**
	Z41728		**Belt**	1072 / 1075 / 1075 HYDRO 4 1174 - 1174 HY	**1**
	Z41889		**Belt**		**1**
	Z41932		**Belt**		**1**
	Z42382		**Belt**	1032 / 1042 / 1052 1055 1155 / 1157 / 1158	**1**
	Z42756		**Belt**	1065 / 1068 1072 / 1075 / 1075 HYDRO 4 108	**1**
	Z42757		**Belt**	1072 / 1075 / 1075 HYDRO 4 1088 1177 - 117	**1**
	Z42758		**Belt**	1085 / 1085 HYDRO 4	**1**
	Z43253		**Belt**	1032 / 1042 / 1052 1055 1155 / 1157 / 1158	**1**

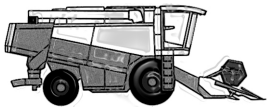

JOHN DEERE

Pos.	Codice Originale	Codice RIMA	Descrizione Description	Applicazione Application	Conf. Pack.
	Z43863		**Belt**	1065 / 1068 1072 / 1075 / 1075 HYDRO 4 108	**1**
	Z43888		**Belt**	1088 1188 - 1188 HYDRO 4	**1**
	Z43889		**Belt**	1088 1188 - 1188 HYDRO 4	**1**
	Z43890		**Belt**	1085 / 1085 HYDRO 4 1088 1170 1188 - 1188	**1**
	Z44740		**Belt**	1032 / 1042 / 1052	**1**
	Z44761		**Belt**	4425 4435 / 4435 HYDRO	**1**
	Z44930		**Belt**	4425	**1**
	Z44936		**Belt**	1088 1166 / 1166 HYDRO 4 1170 1174 - 1174	**1**
	Z45026		**Belt**	1065 / 1068 1072 / 1075 / 1075 HYDRO 4 108	**1**
	Z45191		**Belt**	1072 / 1075 / 1075 HYDRO 4 1085 / 1085 HY	**1**
	Z45192		**Belt**	1072 / 1075 / 1075 HYDRO 4 1085 / 1085 HY	**1**
	Z45359		**Belt**		**1**
	Z45367		**Belt**	1085 / 1085 HYDRO 4 1174 - 1174 HYDRO 4	**1**
	Z45369		**Belt**	1088	**1**
	Z45482		**Belt**	1065 / 1068 1166 / 1166 HYDRO 4 1169 / 116	**1**
	Z46222		**Belt**	1032 / 1042 / 1052 1055 1155 / 1157 / 1158	**1**
	Z46365		**Belt**	1088 1166 / 1166 HYDRO 4 1169 / 1169 HYD	**1**
	Z46366		**Belt**	1166 / 1166 HYDRO 4 1169 / 1169 HYDRO 4	**1**
	Z46463		**Belt**	1088 1170 1188 - 1188 HYDRO 4	**1**
	Z46709		**Belt**	1088 1170 1177 - 1177 HYDRO 4 1188 - 1188	**1**
	Z46759		**Belt**	1166 / 1166 HYDRO 4 1169 / 1169 HYDRO 4	**1**
	Z46764		**Belt**	1166 / 1166 HYDRO 4 1169 / 1169 HYDRO 4	**1**
	Z47763		**Belt**	4435 / 4435 HYDRO	**1**
	Z47911		**Belt**	1065 / 1068 1072 / 1075 / 1075 HYDRO 4 442	**1**
	Z47912		**Belt**	1085 / 1085 HYDRO 4 1166 / 1166 HYDRO 4	**1**
	Z48212		**Belt**	2054 / 2056 / 2058 2064 / 2066 2254 / 2256 / 2	**1**
	Z51212		**Belt**	1088 1166 / 1166 HYDRO 4 1169 / 1169 HYD	**1**
	Z51707		**Belt**	1174 - 1174 HYDRO 4 1188 - 1188 HYDRO 4	**1**
	Z52909		**Belt**	2054 / 2056 / 2058 2064 / 2066	**1**
	Z53288		**Belt**	1032 / 1042 / 1052 1055 1065 / 1068 1155 / 11	**1**
	Z53290		**Belt**	1166 / 1166 HYDRO 4 1169 / 1169 HYDRO 4	**1**
	Z53478		**Belt**		**1**
	Z53515		**Belt**		**1**
	Z54406		**Belt**	2054 / 2056 / 2058 2064 / 2066 2254 / 2256 / 2	**1**
	Z54807		**Belt**	2054 / 2056 / 2058 2064 / 2066 2254 / 2256 / 2	**1**
	Z54808		**Belt**		**1**
	Z55459		**Belt**	2054 / 2056 / 2058 2064 / 2066	**1**
	Z55801		**Belt**	2054 / 2056 / 2058 2064 / 2066	**1**
	Z56351		**Belt**		**1**
	Z56352		**Belt**		**1**
	Z56421		**Belt**	2054 / 2056 / 2058 2064 / 2066 2254 / 2256 / 2	**1**

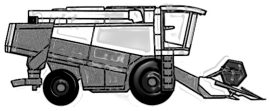

JOHN DEERE

Pos.	Codice Originale	Codice RIMA	Descrizione Description	Applicazione Application	Conf. Pack.
	Z56959		**Belt**	2054 / 2056 / 2058 2064 / 2066 2254 / 2256 / 2	**1**
	Z57084		**Belt**	2054 / 2056 / 2058 2064 / 2066 2254 / 2256 / 2	**1**
	Z58697		**Belt**	1177 - 1177 HYDRO 4	**1**
	Z58751		**Belt**	2054 / 2056 / 2058 2064 / 2066 2254 / 2256 / 2	**1**
	Z58752		**Belt**	2054 / 2056 / 2058 2064 / 2066	**1**
	Z59114		**Belt**	2054 / 2056 / 2058 2064 / 2066 2254 / 2256 / 2	**1**
	Z59255		**Belt**		**1**
	Z59286		**Belt**	2054 / 2056 / 2058 2064 / 2066 2254 / 2256 / 2	**1**
	Z59322		**Belt**	2054 / 2056 / 2058 2064 / 2066 2254 / 2256 / 2	**1**
	Z59342		**Belt**	2054 / 2056 / 2058 2064 / 2066 2254 / 2256 / 2	**1**
	Z59344		**Belt**	2054 / 2056 / 2058 2064 / 2066 2254 / 2256 / 2	**1**
	Z59419		**Belt**	2054 / 2056 / 2058 2064 / 2066 2254 / 2256 / 2	**1**
	Z59556		**Belt**	2054 / 2056 / 2058 2064 / 2066	**1**
	Z59557		**Belt**	2054 / 2056 / 2058 2064 / 2066 2254 / 2256 / 2	**1**
	Z60135		**Belt**	2054 / 2056 / 2058 2064 / 2066 2254 / 2256 / 2	**1**
	Z60930		**Belt**	2054 / 2056 / 2058	**1**
	Z60931		**Belt**	2054 / 2056 / 2058 2064 / 2066 2254 / 2256 / 2	**1**
	Z61150		**Belt**	2054 / 2056 / 2058 2064 / 2066 2254 / 2256 / 2	**1**
	Z61151		**Belt**	2054 / 2056 / 2058 2064 / 2066 2254 / 2256 / 2	**1**
	Z61152		**Belt**	2054 / 2056 / 2058 2064 / 2066 2254 / 2256 / 2	**1**
	Z61153		**Belt**	2054 / 2056 / 2058 2064 / 2066	**1**
	Z61154		**Belt**	2054 / 2056 / 2058 2064 / 2066	**1**
	Z61164		**Belt**	2054 / 2056 / 2058	**1**
	Z61827		**Belt**	2054 / 2056 / 2058 2064 / 2066 2254 / 2256 / 2	**1**
	Z61857		**Belt**	2054 / 2056 / 2058 2064 / 2066 2254 / 2256 / 2	**1**
	Z61858		**Belt**	2054 / 2056 / 2058 2064 / 2066 2254 / 2256 / 2	**1**
	Z62025		**Belt**		**1**
	Z62110		**Belt**	2054 / 2056 / 2058 2064 / 2066 2254 / 2256 / 2	**1**
	Z62111		**Belt**	2054 / 2056 / 2058 2064 / 2066 2254 / 2256 / 2	**1**
	Z62213		**Belt**	2054 / 2056 / 2058 2064 / 2066 2254 / 2256 / 2	**1**
	Z62214		**Belt**	2054 / 2056 / 2058 2254 / 2256 / 2258	**1**
	Z62551		**Belt**	2054 / 2056 / 2058 2254 / 2256 / 2258	**1**
	Z62552		**Belt**	2054 / 2056 / 2058 2254 / 2256 / 2258	**1**
	Z63005		**Belt**	2054 / 2056 / 2058 2064 / 2066 2254 / 2256 / 2	**1**
	Z63322		**Belt**		**1**
	Z64912		**Belt**	2054 / 2056 / 2058 2064 / 2066 2254 / 2256 / 2	**1**
	Z65924		**Belt**		**1**
	ZX61857		**Belt**		**1**

Notes

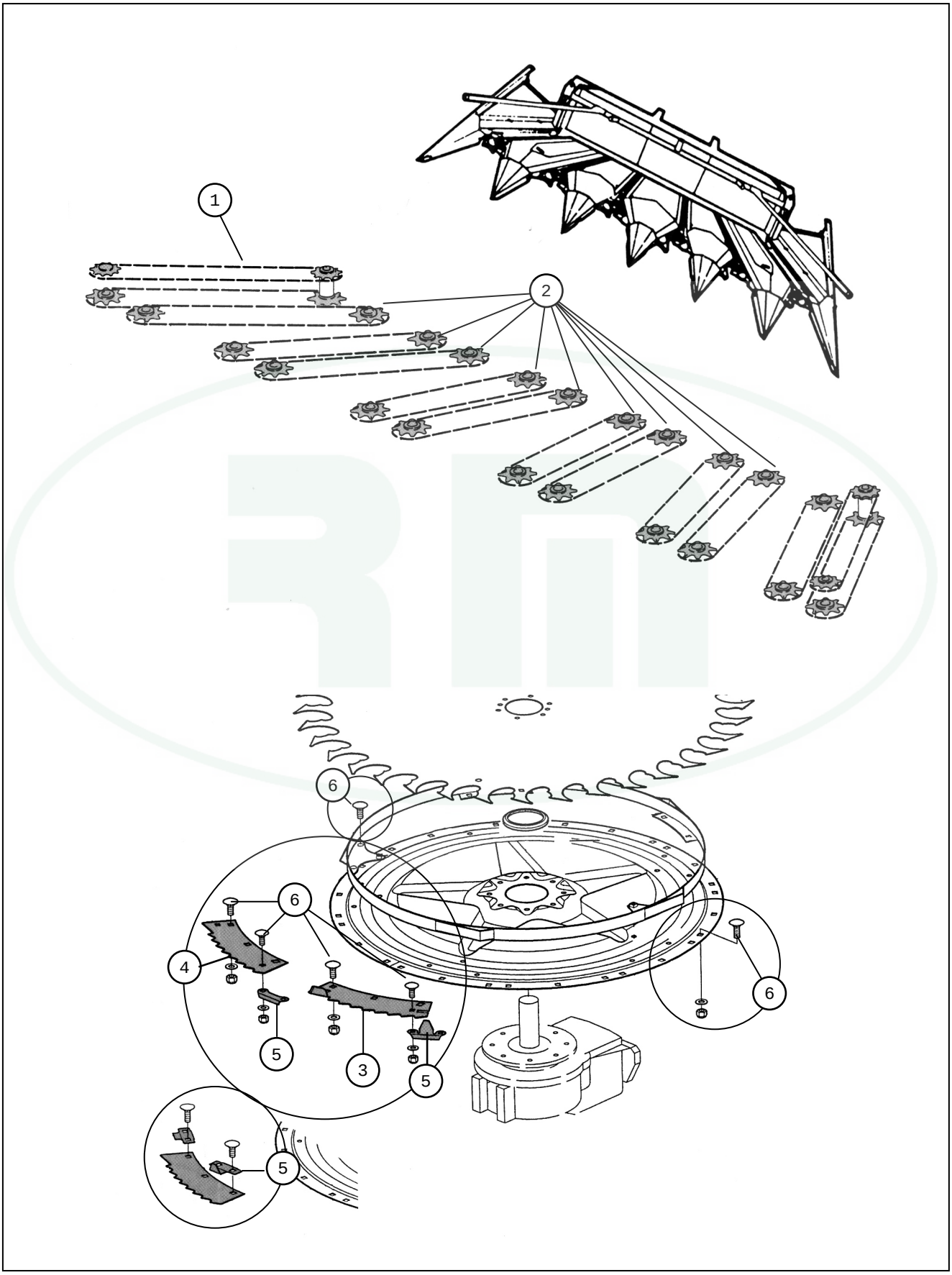
1
2
6
6
4
5
3
5
6
5

JOHN DEERE TRINCIA

Pos.	Codice Originale	Codice RIMA	Descrizione Description	Applicazione Application	Conf. Pack.
			TESTATA *Header*		
	JD9214	**RM21-349**	**Bearing**	4 file	**1**
	P42285	**RM21-350**	**Protection**	4 file	**1**
01	**AE44151**	**RM21-343**	**Conveyor chain**	4 file - 64 maglie	**1**
	AE44152	**RM21-344**	**Conveyor chain**	4 file - 88 maglie	**1**
	AE44155	**RM21-345**	**Conveyor chain**	4 file - 108 maglie	**1**
	AE44156	**RM21-346**	**Conveyor chain**	4 file - 112 maglie	**1**
02	**AE45166**	**RM21-347**	**Sprocket**	4 file	**1**
	AE45167	**RM21-348**	**Sprocket**	4 file	**1**
03	**66037**	**RM21-301**	**Segment**	3mts - 4,5mts.	**1**
	66038	**RM21-398**	**Segment**	3mts - 4,5mts.	**1**
04	**66035**	**RM21-304**	**Segment**	3mts - 4,5mts.	**1**
	66036	**RM21-397**	**Segment**	3mts - 4,5mts.	**1**
	67746	**RM21-305**	**Segment**	6mts. - 8 file	**1**
05	**65121**	**RM21-401**	**Plate**	3mts - 4,5mts.	**1**
	67157	**RM21-309**	**Plate**	3mts - 4,5mts.	**1**
	69805	**RM21-310**	**Plate**	6mts. - 8 file	**1**
	69806	**RM21-402**	**Plate**	6mts. - 8 file	**1**
06	**19M7284**	**RM21-400**	**Screw**	M8x18 3mts. - 4,5mts.	**1**
	57518	**RM21-403**	**Screw**	8x25 3mts. - 4,5mts.	**50**
	63392	**RM21-404**	**Screw**	10x25 3mts. - 4,5mts.	**50**
	69947	**RM21-399**	**Screw**	M8x16 6mts. - 8 file	**50**
	E34227	**RM21-352**	**Screw**	4 file	**1**

JOHN DEERE TRINCIA

Lame – *Drum Knives*

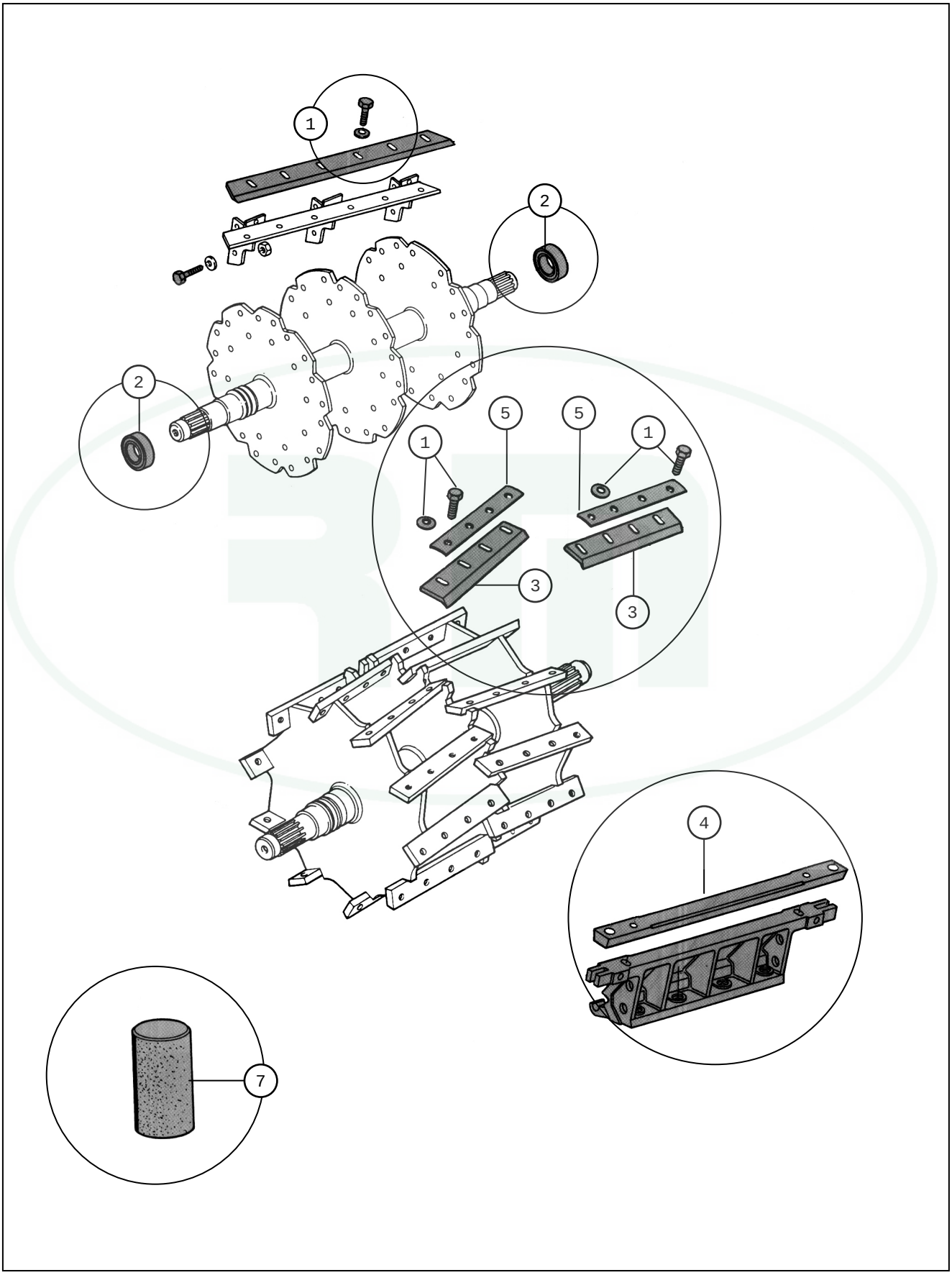

JOHN DEERE TRINCIA

Pos.	Codice Originale	Codice RIMA	Descrizione Description	Applicazione Application	Conf. Pack.
			LAME *Drum Knives*		
	E72012	**RM21-366**	**Plastic guide**	5420 - 5830	**1**
	Z49449	**RM21-367**	**Plastic guide**	Serie 6000	**1**
01	**E71444**	**RM21-353**	**Bolt**	5420 - 5830	**1**
02	**AE38694**	**RM21-354**	**Bearing**	5420 - 5830	**1**
	AZ48939	**RM21-356**	**Bearing**	Serie 6000	**1**
	JD9307	**RM21-355**	**Bearing**	5420 - 5830 - Serie 6000	**1**
03	**E63576**	**RM21-351**	**Cutting knife**	4 file	**1**
	E66678	**RM21-357**	**Cutting knife**	5420 - 5830	**1**
	Z49622	**RM21-322**	**Cutting knife**	Serie 6000	**1**
	Z56647	**RM21-323**	**Cutting knife**	Serie 6000	**1**
	Z62075	**RM21-325/DX**	**Cutting knife**	Serie 6000	**1**
	Z62076	**RM21325/SX**	**Cutting knife**	Serie 6000	**1**
04	**AE44466**	**RM21-314**	**Counterknife**	5420 - 5830	**1**
	Z58924	**RM21-358**	**Counterknife**	Serie 6000	**1**
	Z58925	**RM21-359**	**Counterknife**	Serie 6000	**1**
05	**E66536**	**RM21-363**	**Plate**	5420 - 5830	**1**
	E66537	**RM21-364**	**Plate**	5420 - 5830	**1**
	Z60535	**RM21-365**	**Plate**	Serie 6000	**1**
07	**AE22635**	**RM21-360**	**Grinding stone**	5420 - 5830	**1**
	AE40900	**RM21-361**	**Grinding stone**	5420 - 5830	**1**
	AZ48700	**RM21-362**	**Grinding stone**	Serie 6000	**1**

NEW HOLLAND

Barra di Taglio - *Cutting Bar*

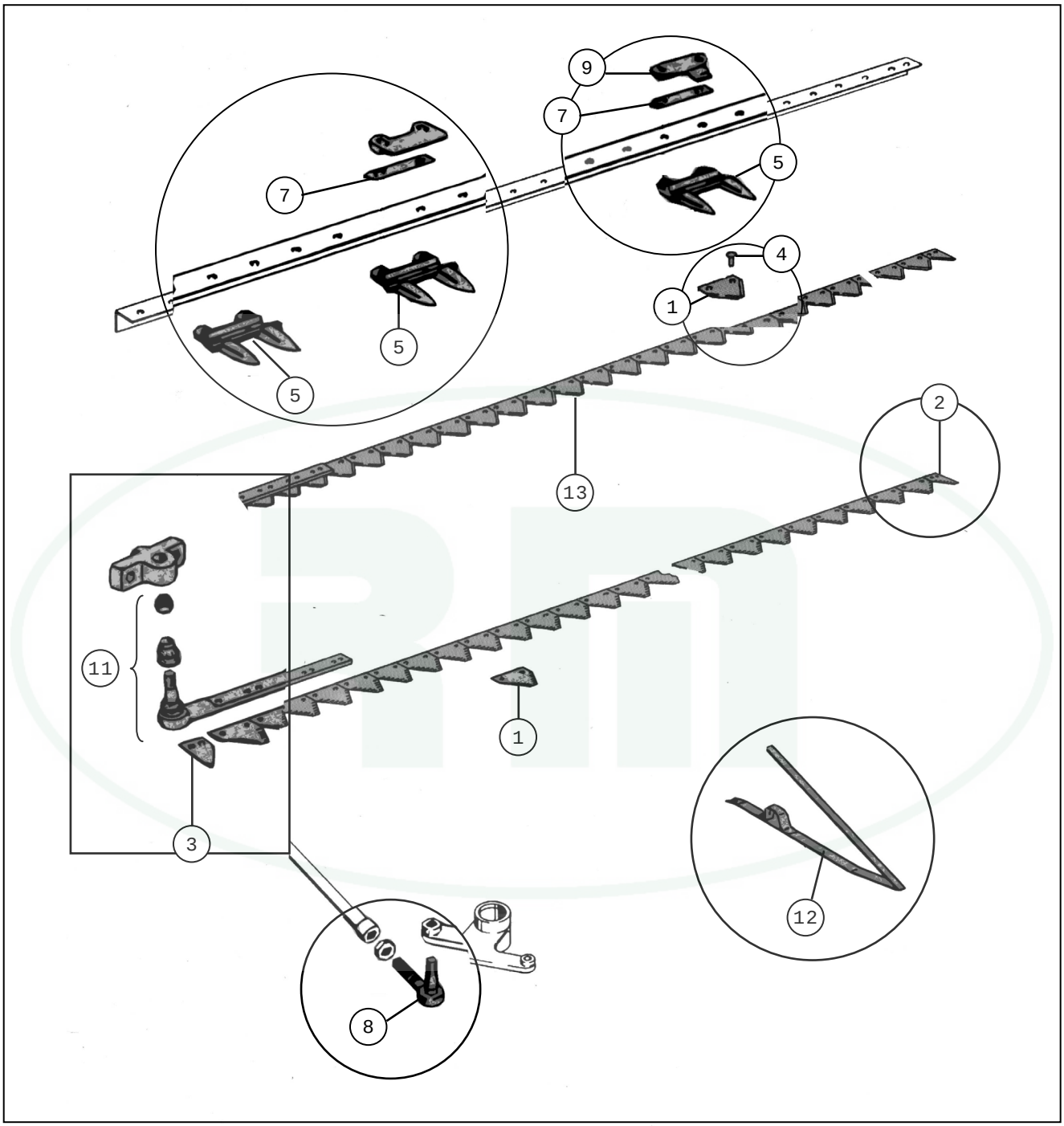

14

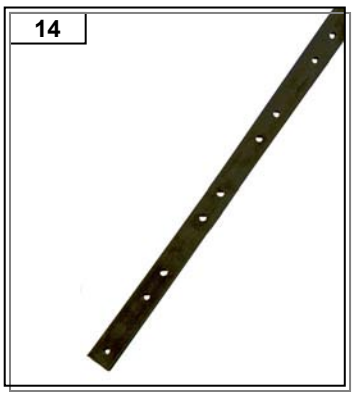

15

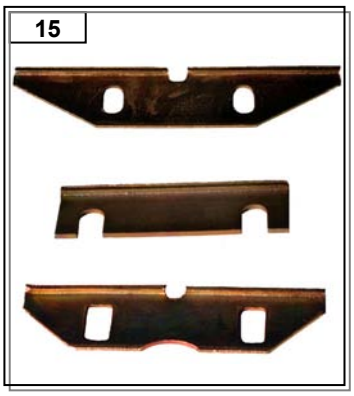

16

US = rigata sotto
TS = rigata sopra
TTQST = testa tonda quadro sotto t.
TT = testa tonda
TPSV = testa piana svasata

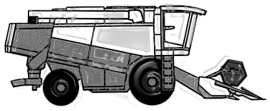

NEW HOLLAND

Pos.	Codice Originale	Codice RIMA	Descrizione Description	Applicazione Application	Conf. Pack.
			BARRA DI TAGLIO *Cutterbar*		
01	580224721	RM11-306	Knife section	Riso - 3,5mm	25
	80029875	RM11-135	Knife section	M22831 - 2,7mm	25
	80309197	RM11-003	Knife section	2,7mm	25
	80322481	RM11-004	Knife section	2,7mm	25
	80326499	RM11-224	Knife section	26622/2421	25
	80365110	RM11-165	Knife section	2,7mm	25
	80365111	RM11-166	Knife section	2,7mm	25
	80720596	RM11-139	Knife section	P.78674	25
	80755207	RM11-002	Knife section	84998682 Soia - 2,7mm	25
	80755207	RM11-005	Knife section	84998682 Soia - 2,7mm	25
	80756131	RM11-243	Knife section		25
	84429103	RM11-309	Knife section	84435879 liscia - TN serie CX-80365110 foro	25
	89508722	RM11-144	Knife section	Riso - 2,7mm	25
	89508731	RM11-145	Knife section	Riso - 2,7mm.	25
	F-27	RM11-244	Knife section		25
	F-30	RM11-245	Knife section		25
02	80161649	RM11-134	Half section		25
	80365112	RM11-001	Half section	80323766 - 2,7mm / 54433772 / 84435824 lisc	25
04	80065474	RM11-307	Rivet	5,4 x 15-25-32	2
	80412681	RM11-076	Screw	Testa 80753862 - serie 8000, TX	1
	80796040	RM11-048	Bolt	Soia TV - 6x16	100
	80796041	RM11-049	Bolt	Soia TV; 6x22	100
	80796042	RM11-050	Bolt	Soja TV; 6x27	100
	80823272	RM11-097	Bolt	Soia TN - 756213	100
	80823273	RM11-098	Bolt	Soia TN - 756213	100
	80823274	RM11-099	Bolt	Soia TN - 756213	100
	84429099	RM11-565	Bolt	6 x 16	100
	84429100	RM11-564	Bolt	6 x 22	100
	84429101	RM11-563	Bolt	6 x 27	100
05	80065327	RM11-182	Double finger	GB215	1
	80379720	RM11-006	Double finger		1
	80466789	RM11-046	Double finger	Soia, RM 789	1
	80466845	RM11-047	Double finger	80766032 - Soia TV	1
	80720051	RM11-130	Double finger	Falciacondizionatrice	1
	80756917	RM11-121	Double finger	0623.6756	1
	80823269	RM11-093	Double finger	Soia TV	1
	80823270	RM11-094	Double finger	Soia TN - 823290	1
	80916328	RM11-077	Double finger		1

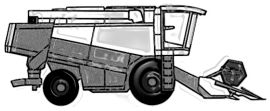

NEW HOLLAND

Pos.	Codice Originale	Codice RIMA	Descrizione Description	Applicazione Application	Conf. Pack.
05	80918222	RM11-556	Sinple finger		1
07	80482769	RM11-183	Thick	Serie 1500, 8000, TC, TF, TX	1
	89508728	RM11-220	Thick	Barra riso	1
	89508729	RM11-221	Thick	Barra riso	1
08	80350016	RM11-067	Ball joint	DX. 24x1,5	1
	80350679	RM11-061	Ball joint	TV 24x78	1
09		RM1402	Knife clip - RM knives	universale	10
	80384358	RM11-310	Knife clip	TN per serie TX/TF/TC	10
	80562343	RM11-131	Knife clip	Falciacondizionatrice	10
	80562344	RM11-132	Knife clip	Falciacondizionatrice	10
	84073333	RM11-554	Knife clip	84800496	10
	89508725	RM11-163	Knife clip	Barra riso	10
	89508726	RM11-162	Knife clip	Barra riso	10
	89837027	RM11-039	Knife clip	84022280 - 80326896 - 80384357 - 89838318	10
11	80134023	RM11-007	Knife head	Serie 1500	1
	80321204	RM11-085	Greaser		1
	80354121	RM11-038	O ring		1
	80354124	RM11-037	Ball bearing		1
	80354413	RM11-034	Knife head	Serie 1500/8000/TF - aspo giallo	1
	80354413	RM11-035	Knife head	Serie 1500/8000/TF - aspo giallo	1
	80354413	RM11-225	Knife head	Serie 1500/8000/TF - aspo giallo	1
	80372570	RM11-036	Head extension	80748224	1
	80420007	RM11-480	Knife head		1
	80522614	RM11-133	Knife head	Falciacondizionatrice	1
	80753861	RM11-084	Knife head	Serie 8000, TX, TC, TF	1
	80753862	RM11-083	Knife head	Serie 8000, TX, TC, TF	1
	80758559	RM11-082	Cover		1
	80758561	RM11-078	O ring		1
	80758563	RM11-081	Shaft		1
	80758565	RM11-080	O ring		1
	80759649	RM11-095	Knife head	Soia	1
	80759650	RM11-096	Knife head	Soia	1
	80916806	RM11-079	Shaft		1
	84433769	RM11-314	Knife head	TN Serie CX	1
12	80338047	RM11-254	Crop lifter	111418124	1
	82040982	RM11-255	Crop lifter	Universale, 131500113	1
	89815614	RM11-256	Crop lifter	Standard, 111527127	1
	89815615	RM11-257	Crop lifter	Universale, 131527127	1
	89817211	RM11-258	Bolt	KM-3 209023025	1

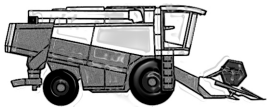

NEW HOLLAND

Pos.	Codice Originale	Codice RIMA	Descrizione Description	Applicazione Application	Conf. Pack.
13		RM11-250	Complete knife	15 ft., Soia	1
		RM11-251	Complete knife	18 ft., Soia	1
	80314423	RM11-227	Complete knife	M122, M133/S, M140,1500,8000, prima serie	1
	80314427	RM11-167	Complete knife	M122, M133/S, M140,1500,8000, prima serie	1
	80314428	RM11-168	Complete knife	M122, M133/S, M140,1500,8000, prima serie	1
	80314429	RM11-169	Complete knife	M122, M133/S, M140,1500,8000, prima serie	1
	80314430	RM11-170	Complete knife	M122, M133/S, M140,1500,8000, prima serie	1
	80314431	RM11-171	Complete knife	M122, M133/S, M140,1500,8000, prima serie	1
	80314432	RM11-172	Complete knife	M122, M133/S, M140,1500,8000, prima serie	1
	80314433	RM11-173	Complete knife	M122, M133/S, M140,1500,8000, prima serie	1
	80314434	RM11-174	Complete knife	M122, M133/S, M140,1500,8000, prima serie	1
	80314435	RM11-175	Complete knife	M122, M133/S, M140,1500,8000, prima serie	1
	80314436	RM11-176	Complete knife	M122, M133/S, M140,1500,8000, prima serie	1
	80314437	RM11-177	Complete knife	M122, M133/S, M140,1500,8000, prima serie	1
	80314438	RM11-026	Complete knife	M122, M133/S, M140,1500,8000, prima serie	1
	80314439	RM11-027	Complete knife	M122, M133/S, M140,1500,8000, prima serie	1
	80314440	RM11-028	Complete knife	M122, M133/S, M140,1500,8000, prima serie	1
	80314441	RM11-029	Complete knife	M122, M133/S, M140,1500,8000, prima serie	1
	80314442	RM11-030	Complete knife	M133/S, M140,1500,8000, prima serie TF:	1
	80314443	RM11-031	Complete knife	M122, M133/S, M140,1500,8000, prima serie	1
	80314444	RM11-033	Complete knife	M122, M133/S, M140,1500,8000, prima serie	1
	80316150	RM11-032	Complete knife	M122, M133/S, M140,1500,8000, prima serie	1
	80316151	RM11-178	Complete knife	M122, M133/S, M140,1500,8000, prima serie	1
	80325013	RM11-021	Complete knife		1
	80325014	RM11-022	Complete knife		1
	80325015	RM11-023	Complete knife		1
	80325016	RM11-024	Complete knife		1
	80325017	RM11-025	Complete knife		1
	80420004	RM11-179	Complete knife	M122, M133/S, M140,1500,8000, prima serie	1
	80420005	RM11-180	Complete knife	M122, M133/S, M140,1500,8000, prima serie	1
	80420037	RM11-468	Complete knife	M122, M133/S, M140,1500,8000, prima serie	1
	80728275	RM11-137	Complete knife		1
	80754066	RM11-075	Complete knife	8000, TX, TF (ultime serie), TC - Aspo nero	1
	80754068	RM11-073	Complete knife	8000, TX, TF (ultime serie), TC - Aspo nero	1
	80755008/V	RM11-100	Complete knife	13 ft., Soia	1
	80755009/V	RM11-101	Complete knife	15 ft., Soia	1
	80756134/V	RM11-248	Complete knife	13 ft., Soia	1
	80756135/V	RM11-249	Complete knife	15 ft., Soia	1
	80758827/V	RM11-102	Complete knife	18 ft., Soia	1
	80913804	RM11-238	Complete knife	8000, TX, TF (ultime serie), TC - Aspo nero	1
	80916839	RM11-074	Complete knife	8000, TX, TF (ultime serie), TC - Aspo nero	1

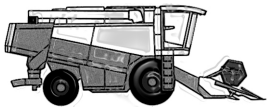

NEW HOLLAND

Pos.	Codice Originale	Codice RIMA	Descrizione Description	Applicazione Application	Conf. Pack.
13	80918013	RM11-228	Complete knife	8000, TX, TF (ultime serie), TC - Aspo nero	1
	80918014	RM11-237	Complete knife	8000, TX, TF (ultime serie), TC - Aspo nero	1
	80918015	RM11-239	Complete knife	8000, TX, TF (ultime serie), TC - Aspo nero	1
	80922689	RM11-072	Complete knife	8000, TX, TF (ultime serie), TC - Aspo nero	1
	80922690	RM11-071	Complete knife	8000, TX, TF (ultime serie), TC - Aspo nero	1
	80922691	RM11-070	Complete knife	8000, TX, TF (ultime serie), TC - Aspo nero	1
	80922692	RM11-236	Complete knife	8000, TX, TF (ultime serie), TC - Aspo nero	1
	80922714	RM11-140	Complete knife	8000, TX, TF (ultime serie), TC - Aspo nero	1
	80922715	RM11-119	Complete knife	8000, TX, TF (ultime serie), TC - Aspo nero	1
	80922716	RM11-242	Complete knife	8000, TX, TF (ultime serie), TC - Aspo nero	1
	80922717	RM11-241	Complete knife	8000, TX, TF (ultime serie), TC - Aspo nero	1
	80922718	RM11-240	Complete knife	8000, TX, TF (ultime serie), TC - Aspo nero	1
	84433815/V	RM11-478	Complete knife	20 '	1
	84435369/V	RM11-567	Complete knife		1
	84435370/V	RM11-566	Complete knife		1
	84435371/V	RM11-476	Complete knife	15'	1
	84435372/V	RM11-477	Complete knife	17 '	1
	84435373/V	RM11-479	Complete knife	24 '	1
	84435374/V	RM11-557	Complete knife		1
	89508718	RM11-151	Complete knife - sectional	Riso	1
	89508719	RM11-152	Complete knife - sectional	Riso	1
	89508720	RM11-150	Complete knife - sectional	Riso	1
	89508721	RM11-153	Complete knife - sectional	Riso	1
	89508730	RM11-147	Complete knife	15 ft., Riso	1
	89508736	RM11-148	Complete knife	17 ft., Riso	1
	89508737	RM11-149	Complete knife	20 ft., Riso	1
	89508738	RM11-313	Complete knife		1
	89508739	RM11-146	Complete knife	13 ft., Riso	1
14		RM11-141	Knife back		1
		RM11-142	Knife back		1
		RM11-143	Knife back		1
		RM11-154	Knife back		1
		RM11-155	Knife back		1
		RM11-156	Knife back		1
		RM11-157	Knife back		1
		RM11-158	Knife back		1
		RM11-159	Knife back		1
		RM11-160	Knife back		1
		RM11-161	Knife back		1
	80327920/0	RM11-016	Knife back		1

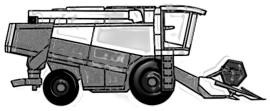

NEW HOLLAND

Pos.	Codice Originale	Codice RIMA	Descrizione Description	Applicazione Application	Conf. Pack.
14	80327920/1	RM11-017	Knife back		1
	80327920/2	RM11-018	Knife back		1
	80327920/3	RM11-019	Knife back		1
	80327920/4	RM11-020	Knife back		1
	80350470	RM11-009	Knife back		1
	80350471	RM11-010	Knife back		1
	80350472	RM11-011	Knife back		1
	80350473	RM11-012	Knife back		1
	80350474	RM11-013	Knife back		1
	80350475	RM11-014	Knife back		1
	80350476	RM11-015	Knife back		1
	80721374	RM11-138	Knife back		1
15	80309169	RM11-040	Wearing plate	206196	1
	80720039	RM11-136	Wearing plate	40617 - Falciacondizionatrice	1
	89508727	RM11-164	Wearing plate	L.19971 - Riso	1
16	80333318	RM11-247	Finger plate	C2405	1

NEW HOLLAND
Comando Lama - *Gearbox*

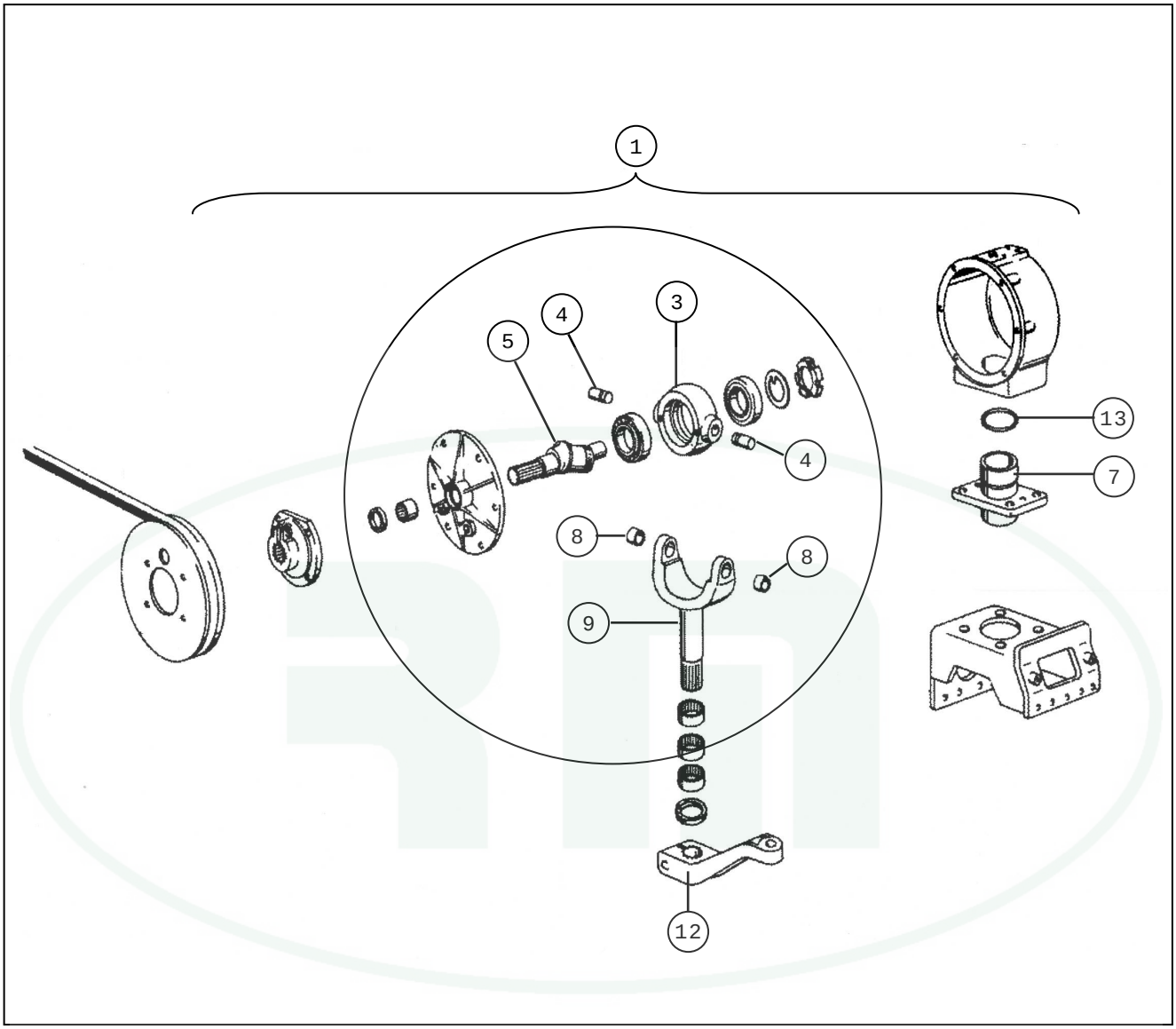

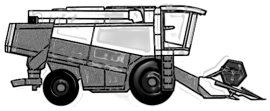

NEW HOLLAND

Pos.	Codice Originale	Codice RIMA	Descrizione Description	Applicazione Application	Conf. Pack.
			COMANDO LAMA *Gearbox*		
	80350460	**RM11-207**	**Bolt**	Scatola 80747972	**1**
01	**80747972**	**RM11-197**	**Gearbox**	Serie 1500/8000 vecchia vers.	**1**
	80850117	**RM11-198**	**Gearbox**	Serie 8000 vers. nuova/TX/TF	**1**
03	**80354787**	**RM11-558**	**Housing**	80458658	**1**
	80747863	**RM11-559**	**Housing**		**1**
04	**80747861**	**RM11-203**	**Pivot**	Scatola 80747972	**1**
05	**80747864**	**RM11-205**	**Shaft**	Scatola 80747972	**1**
07	**80356924**	**RM11-199**	**Support**	Scatola 80747972	**1**
08	**80748066**	**RM11-202**	**Bearing**	Scatola 80747972	**1**
09	**80356819**	**RM11-503**	**Fork**		**1**
	80747862	**RM11-201**	**Fork**	Scatola 80747972	**1**
12	**80356818**	**RM11-502**	**Lever**		**1**
	80386753	**RM11-200**	**Lever**	Scatola 80747972	**1**
13	**80356802**	**RM11-206**	**Bearing**	Scatola 80747972	**1**

NEW HOLLAND

Coclea - *Auger*

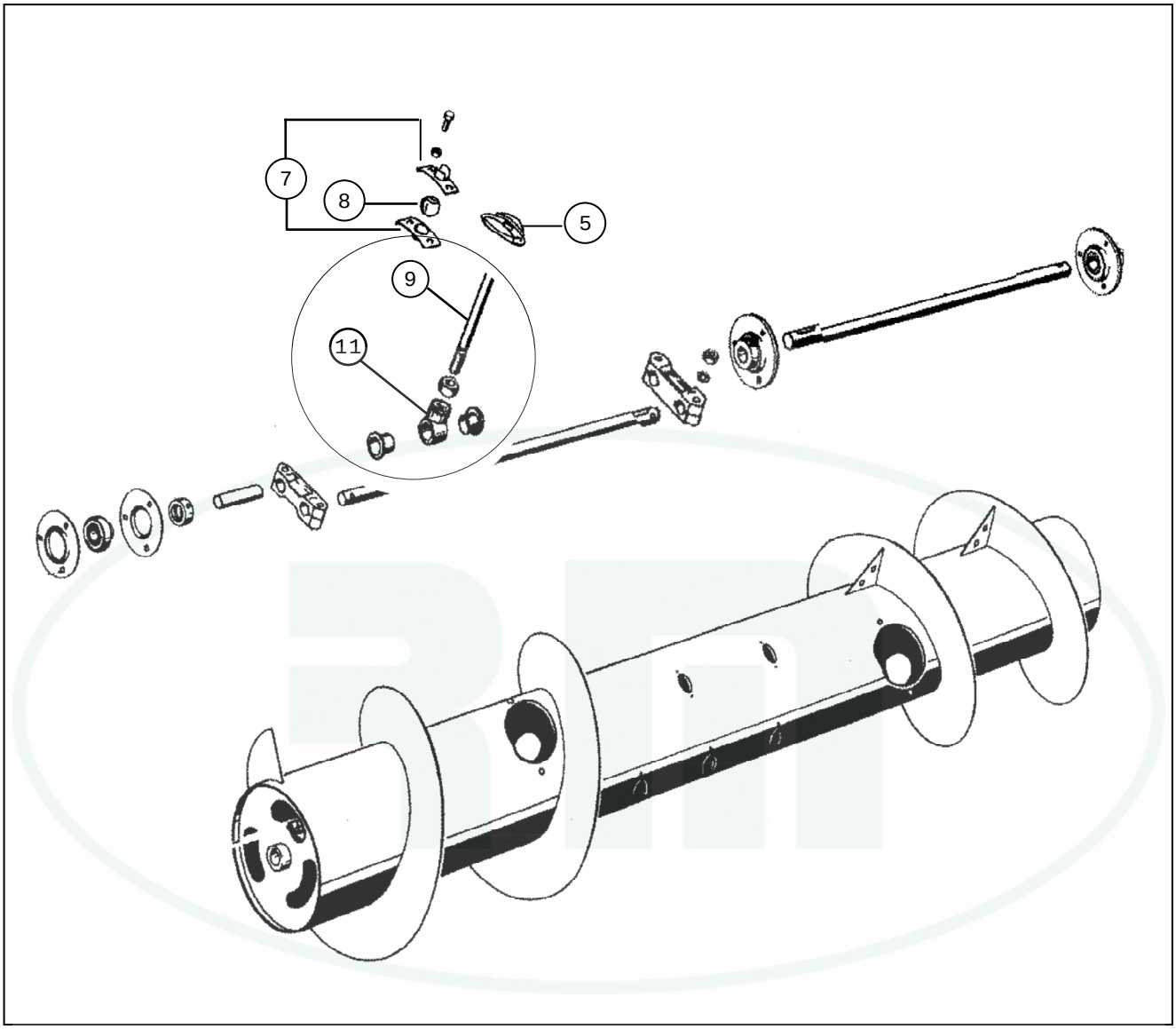

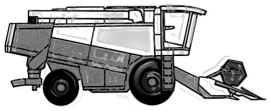

NEW HOLLAND

Pos.	Codice Originale	Codice RIMA	Descrizione Description	Applicazione Application	Conf. Pack.
			COCLEA *Auger*		
	80324799	**RM11-111**	**Retractable finger kit**	320817/320818/320820/334972	**1**
05	**89503888**	**RM11-092**	**Finger guide**	89832294	**25**
07	**80320818/20**	**RM11-043**	**Support kit**	80324799/ Serie 1500	**1**
	80740602/3	**RM11-088**	**Support kit**		**1**
08	**80320817**	**RM11-042**	**Guide ball**		**1**
	80740600	**RM11-090**	**Guide ball**		**1**
09	**80334972**	**RM11-045**	**Retractable finger**		**10**
	80434909	**RM11-051**	**Retractable finger**		**10**
	80434909/a	**RM11-302**	**Retractable finger**	Dito in nylon	**10**
	80458450	**RM11-066**	**Retractable finger**	Soia	**10**
	80467989	**RM11-233**	**Retractable finger**		**10**
	80740352	**RM11-086**	**Retractable finger**		**10**
	80824042	**RM11-234**	**Retractable finger**		**10**
	84000121	**RM11-253**	**Retractable finger**	Serie TF/TX dopo `87	**10**
	84996278	**RM11-308**	**Retractable finger**	Soia	**10**
	84996279	**RM11-305**	**Retractable finger**	Soia	**10**
	89508376	**RM11-041**	**Retractable finger**	Serie 8000	**10**
11	**80320816**	**RM11-052**	**T bushing**		**10**
	80320816/a	**RM11-311**	**T bushing - RM modification**		**10**
	80422654	**RM11-053**	**T bushing**		**10**
	80422654/a	**RM11-301**	**T bushing - RM modification**		**10**
	80740844	**RM11-087**	**T bushing**		**10**
	80740844/a	**RM11-312**	**T bushing - RM modification**		**10**

NEW HOLLAND

Aspo - *Reel Tines*

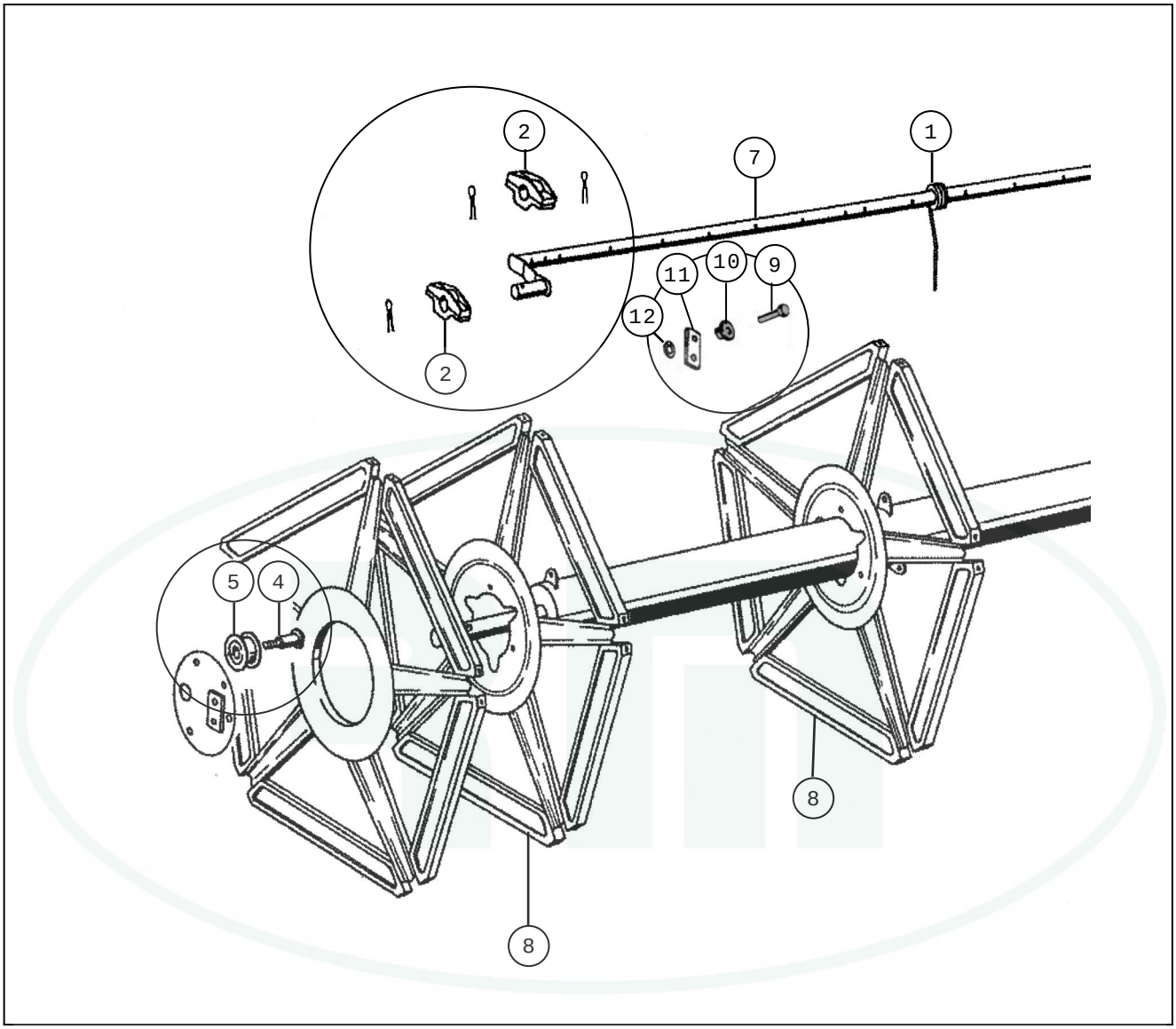

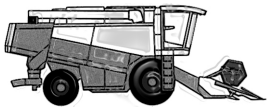

NEW HOLLAND

Pos.	Codice Originale	Codice RIMA	Descrizione Description	Applicazione Application	Conf. Pack.
			ASPO *Reel Tines*		
	80280058	**RM11-222**	**Clutch**	Serie 1500	**1**
	80362801	**RM11-223**	**Clutch**	Serie 1500/8000/TF/TX	**1**
	80372975	**RM11-210**	**Shaft**	Serie 1500/8000/TF/TX	**1**
	80372981	**RM11-209**	**Shaft**	Serie 1500/8000/TF/TX	**1**
01	**80334016**	**RM11-065**	**Reel tine**	Serie 1500/8000 sost. da: 80435428	**20**
	80433415	**RM11-226**	**Reel tine**	80334016/Serie 1500/8000	**20**
	80435428	**RM11-181**	**Reel tine**	Serie 8000/TF/TX / 89819750	**20**
02	**80333963**	**RM11-208**	**Plate**	Serie 1500 e 8000/TX/TF	**1**
04	**80333976**	**RM11-212**	**Pivot**	Serie 1500/8000/TF/TX	**1**
05	**80333967**	**RM11-300**	**Roller**	Serie 1500/8000/TF/TX	**1**
07	**80333964**	**RM11-211**	**Connector**	Serie 1500/8000/F/TX	**1**
08	**80334017**	**RM11-214**	**Reel arm**	Serie 1500/8000/TF/TX	**1**
	80424139	**RM11-215**	**Reel arm**	8030/TF/TX	**1**
09	**80372978**	**RM11-216**	**Pivot**	Serie 1500/8000/TF/TX	**1**
10	**80333966**	**RM11-054**	**Bushing**	Serie 1500/8000/TF/TX	**1**
11	**80333346**	**RM11-218**	**Plate**	Serie 1500/8000/TF/TX	**1**
12	**80333965**	**RM11-219**	**Washer**	Serie 1500/8000/TF/TX	**1**

NEW HOLLAND

Alimentazione - *Feeder Channel*

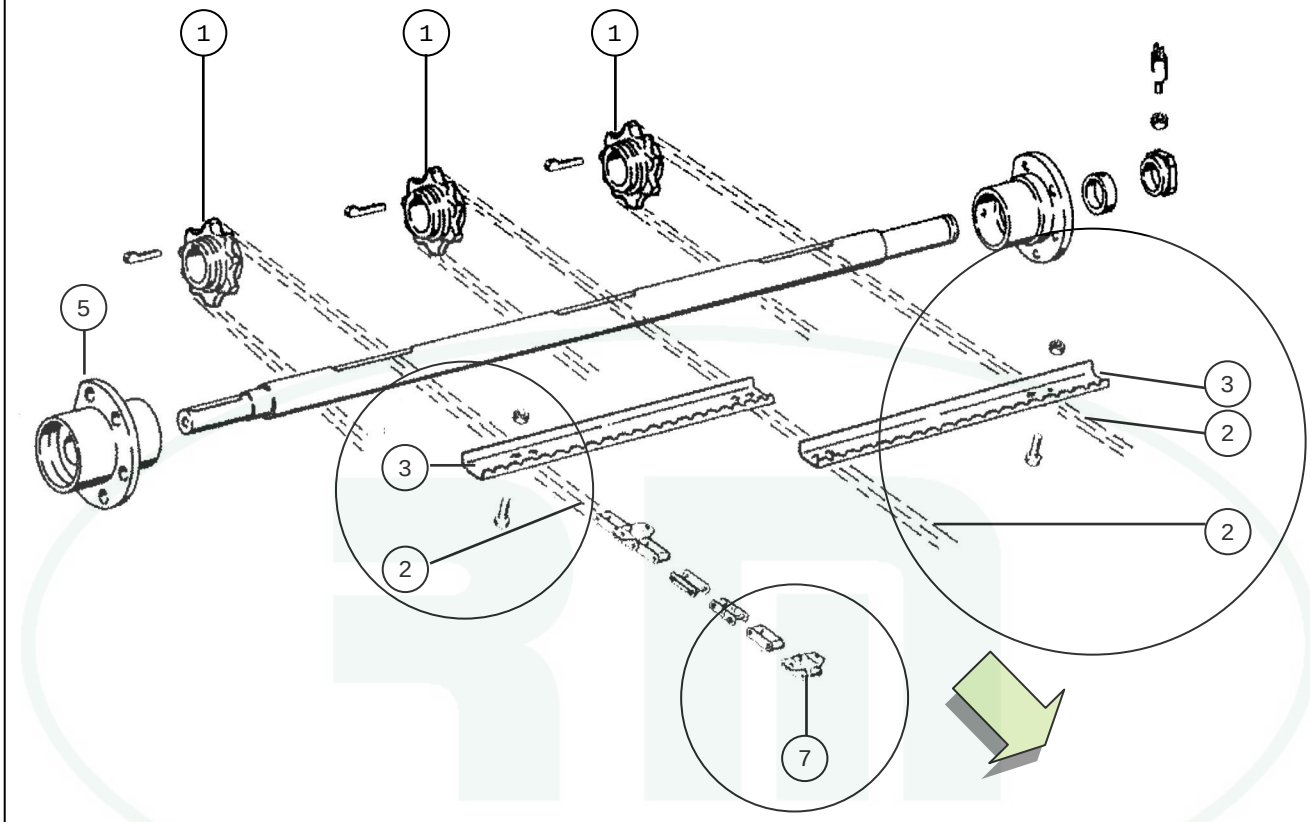

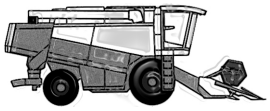

NEW HOLLAND

Pos.	Codice Originale	Codice RIMA	Descrizione Description	Applicazione Application	Conf. Pack.
			ALIMENTAZIONE *Feeder Channel*		
01	80270029	RM11-289	Sprocket	1520/1530/1540	1
	80365826	RM11-290	Sprocket	M103-M135/1540-8070	1
	80417785	RM11-291	Sprocket	Serie 8000/TF/prime serie TX	1
	80421216	RM11-292	Sprocket	8030/8040/8050	1
	84039486	RM11-293	Sprocket	TX65/66/68; TC56; TF72-78	1
	84039487	RM11-294	Sprocket	TX65/66/68; TC56; TF72-78 da no. 4010001	1
	89838869	RM11-295	Sprocket	8050-8080/TX30-36/TF42-46	1
	89838870	RM11-296	Sprocket	8050-8080/TX30-36/TF42-46	1
02		RM11-330	Feeder chain - reinforced & assemblied	TX62-65	1
		RM11-331	Feeder chain - reinforced & assemblied	TX66/TX68 dopo anno costr.95	1
		RM11-332	Feeder chain - assemblied	vers. Rinforzata c/profilo "UPIPPO 8060/8070	1
		RM11-333	Feeder chain - assemblied	vers. Rinforzata c/profilo "UPIPPO 8080	1
	80230016	RM11-297	Feeder chain - reinforced	M80/103/122/133/135/140/1520/1540/1550	1
	80230017	RM11-298	Feeder chain - reinforced	M80/103/122/133/135/140/1520/1540/1550	1
	80315888	RM11-299	Feeder chain - assemblied	vers. rinforzata, da mod. 103-1540	1
	80315889	RM11-316	Feeder chain - assemblied	vers. rinforzata, da mod. 140-1550	1
	80359298	RM11-317	Feeder chain	1520/1530/1540/1545/1550	1
	80359299	RM11-318	Feeder chain	1520/1530/1540/1545/1550	1
	80418370	RM11-319	Feeder chain - assemblied	8030/8040/8050	1
	80427018	RM11-320	Feeder chain kit	8055/8060/8070/8080	1
	80427019	RM11-321	Feeder chain kit	8030/8040/8050	1
	80431379	RM11-322	Feeder chain	8030/8040	1
	80918280	RM11-323	Feeder chain - assemblied	8055/8060/8070	1
	80918281	RM11-324	Feeder chain - assemblied	8080	1
	84021366	RM11-325	Feeder chain kit	TX66/TX68/TX78	1
	89814649	RM11-326	Feeder chain kit	TX36/66/64/65 prima serie TX68	1
	89837259	RM11-327	Feeder chain - assemblied	Vers. Rinforzata, TF42/44, TX32/34	1
03		RM11-346	Chain lath	8080	1
	80378597	RM11-334	Chain lath	M103-1540 e M122	1
	80378598	RM11-335	Chain lath	M140-1550 S	1
	80388818	RM11-336	Chain lath	=cod.80439181	1
	80418369	RM11-337	Chain lath	8050/TX30	1
	80439178	RM11-338	Chain lath	8060/8070/TF42/TF44/TX32/TX34/TX62-65	1
	80439178/U	RM11-344	Chain lath	8055/8060/8070 e TX32/34/TF42/44 (anche M	1
	80439181	RM11-339	Chain lath	8080	1
	80439182	RM11-340	Chain lath	=cod.80418369	1
	80453448	RM11-341	Chain lath	TX36/TF46	1
	80921226	RM11-342	Chain lath	=cod.80453448/TX36/TF46	1

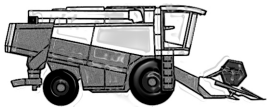

NEW HOLLAND

Pos.	Codice Originale	Codice RIMA	Descrizione Description	Applicazione Application	Conf. Pack.
03	84017779	RM11-343	Chain lath	TX66/68	1
	84017779/U	RM11-345	Chain lath	TX66/68	1
07		RM11-351	Chain link	vers. Rinforzata	1
		RM11-352	Chain link	vers. Rinforzata	1
		RM11-353	Chain link	vers. Rinforzata	1
		RM11-354	Chain link	vers. Rinforzata	1
	80040241	RM11-347	Chain link		1
	80043278	RM11-348	Chain link		1
	80397380	RM11-349	Chain link		1
	80754460	RM11-350	Chain link		1

Notes

NEW HOLLAND

Controbattitore - *Treshing Concave*

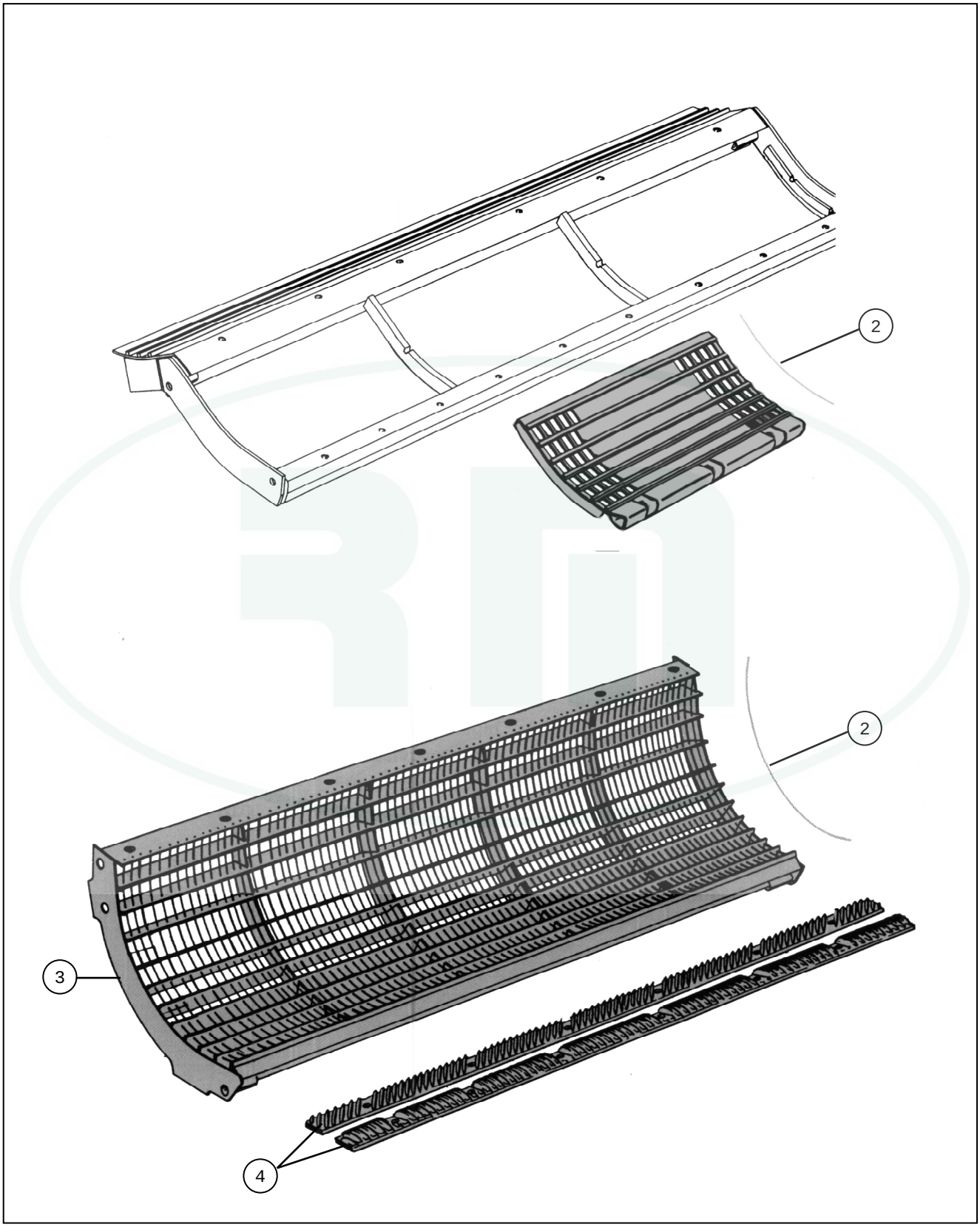

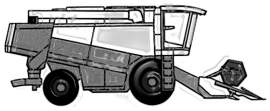

NEW HOLLAND

Pos.	Codice Originale	Codice RIMA	Descrizione Description	Applicazione Application	Conf. Pack.
			CONTROBATTITORE *Treshing Concave*		
	80320934	**RM11-462**	**Pulley**	Serie 1500/8000	**1**
	80748706	**RM11-455**	**Plate**	per concavo 89503460	**1**
	89509685	**RM11-460**	**Rotor**	84607291, TX32-66	**1**
	89509686	**RM11-461**	**Rotor**	84607287, TX62-66	**1**
02		**RM11-452**	**Wire**	per concavi non orig. mod. 1540 1550/8060/70	**1**
		RM11-453	**Wire**	per concavi non orig. mod. 1545	**1**
		RM11-454	**Wire**	per concavi non orig. serieTX	**1**
	80323913	**RM11-450**	**Wire**	1540/1545/1550/8060/70/80	**1**
	80441073	**RM11-451**	**Wire**	Serie TX	**1**
03	**80335988**	**RM11-441**	**Concave**	1540/1540S	**1**
	80336029	**RM11-442**	**Concave**	1550/1550S	**1**
	80380436	**RM11-443**	**Concave**	M140/1545	**1**
	80391234	**RM11-444**	**Concave**	8055/8060/8070	**1**
	80394626	**RM11-445**	**Concave**	8080	**1**
	80411661	**RM11-446**	**Concave**	8030/8040/8050	**1**
	80435801	**RM11-447**	**Concave**	vers. Vecchia/TF42/44/TX32/34	**1**
	80503562	**RM11-448**	**Concave**	TF46/TX36/66/68	**1**
	89503460	**RM11-449**	**Concave**	vers. nuova/TF42/44/TX32/34 TX62/64/65	**1**
04		**RM11-456**	**Lath**	mod. 8060-TX65	**1**
		RM11-457	**Lath**	mod. 8060-TX65	**1**
		RM11-458	**Lath**	8080-TX68	**1**
		RM11-459	**Lath**	8080-TX68	**1**

NEW HOLLAND

Battitore – *Treshing Device*

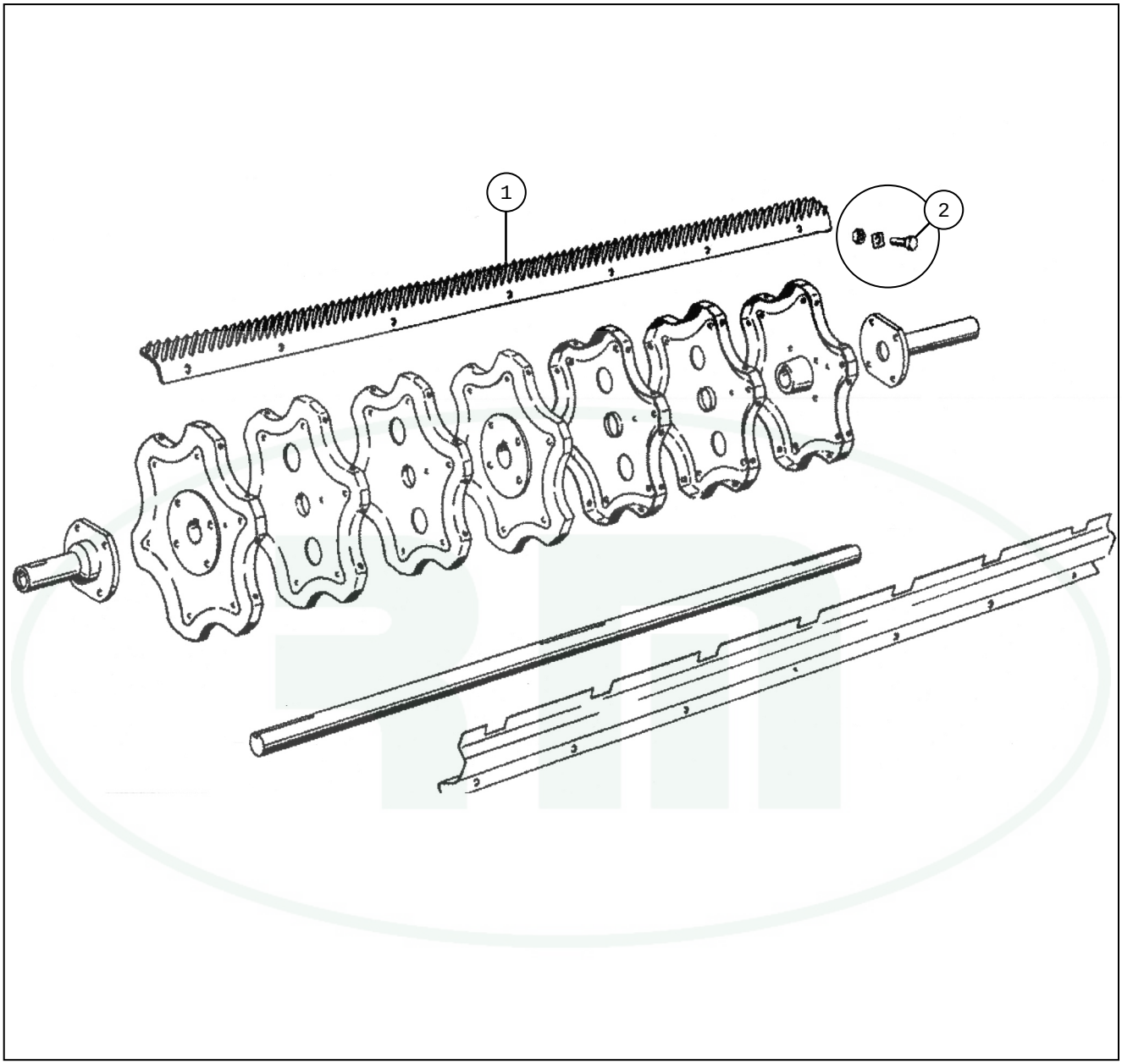

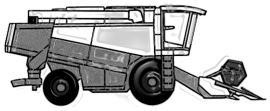

NEW HOLLAND

Pos.	Codice Originale	Codice RIMA	Descrizione Description	Applicazione Application	Conf. Pack.
			BATTITORE *Treshing Device*		
01	80376723	RM11-114	Rasp bar set	M140/1545/1550/1550S	1
	80376724	RM11-125	Rasp bar set	M140/1545/1550/1550S	1
	80376725	RM11-112	Rasp bar set	M103/133/135/1530/1540S	1
	80376726	RM11-123	Rasp bar set	M103/133/135/1530/1540S	1
	89838432	RM11-229	Rasp bar set	8030/8040/8050/TX30/TF42/52 vecch. Cod. 8	1
	89838433	RM11-129	Rasp bar set	8030/8040/8050/TX30/TF42/52 vecch. Cod. 8	1
	89838436	RM11-230	Rasp bar set	8055/8060/8070/TC56/TF42/44 TF72-76/TX3	1
	89838437	RM11-195	Rasp bar set	8055/8060/8070/TC56/TF42/44 TF72-76/TX3	1
	89838438	RM11-231	Rasp bar set	8080/TX36/66/68/TF46/78	1
	89838439	RM11-196	Rasp bar set	8080/TX36/66/68/TF46/78	1
02		RM11-467	Bolt	Incluso dado autobloccante + rondella	1
12	80396935	RM11-059	Spike tooth	Riso	1
	80476014	RM11-058	Spike tooth	Riso	1

NEW HOLLAND

Scuotipaglia – *Straw Walker*

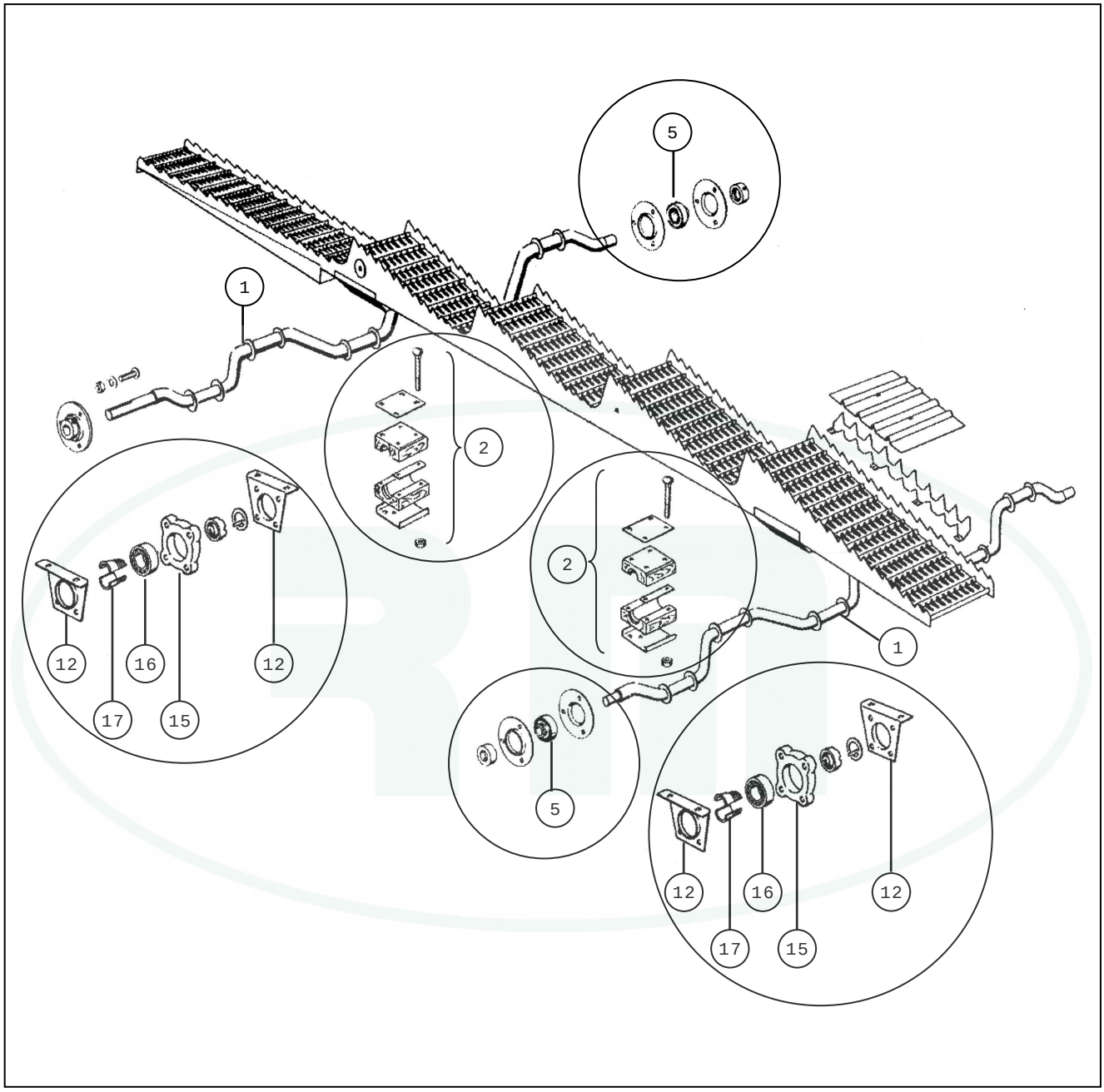

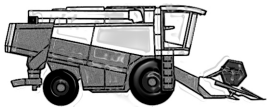

NEW HOLLAND

Pos.	Codice Originale	Codice RIMA	Descrizione Description	Applicazione Application	Conf. Pack.
			SCUOTIPAGLIA *Straw Walker*		
01	80260082	RM11-185	Crankshaft	1530	1
	80260111	RM11-186	Crankshaft	1545/1550	1
	80260112	RM11-187	Crankshaft	1545/1550	1
	80260174	RM11-188	Crankshaft	1530	1
	80332844	RM11-189	Crankshaft	1550	1
	80332845	RM11-190	Crankshaft	1550	1
	80336852	RM11-191	Crankshaft	1540	1
	80336853	RM11-192	Crankshaft	1540	1
	80387205	RM11-193	Crankshaft	8080	1
	80391092	RM11-194	Crankshaft	8060/8070	1
02	80396079	RM11-355	Wooden bearing	Serie 8000/TF/TX	1
05	80306739	RM11-474	Bearing	Serie 1500	1
	80325106	RM11-432	Bearing	Serie 1500	1
12	80310049	RM11-356	Housing	Serie 1500	1
	80310085	RM11-473	Flange		1
15	80310056	RM11-475	Housing		1
16	80210033	RM11-471	Bearing		1
17	80310072	RM11-472	Flange		1

NEW HOLLAND

Crivelli – *Sieves*

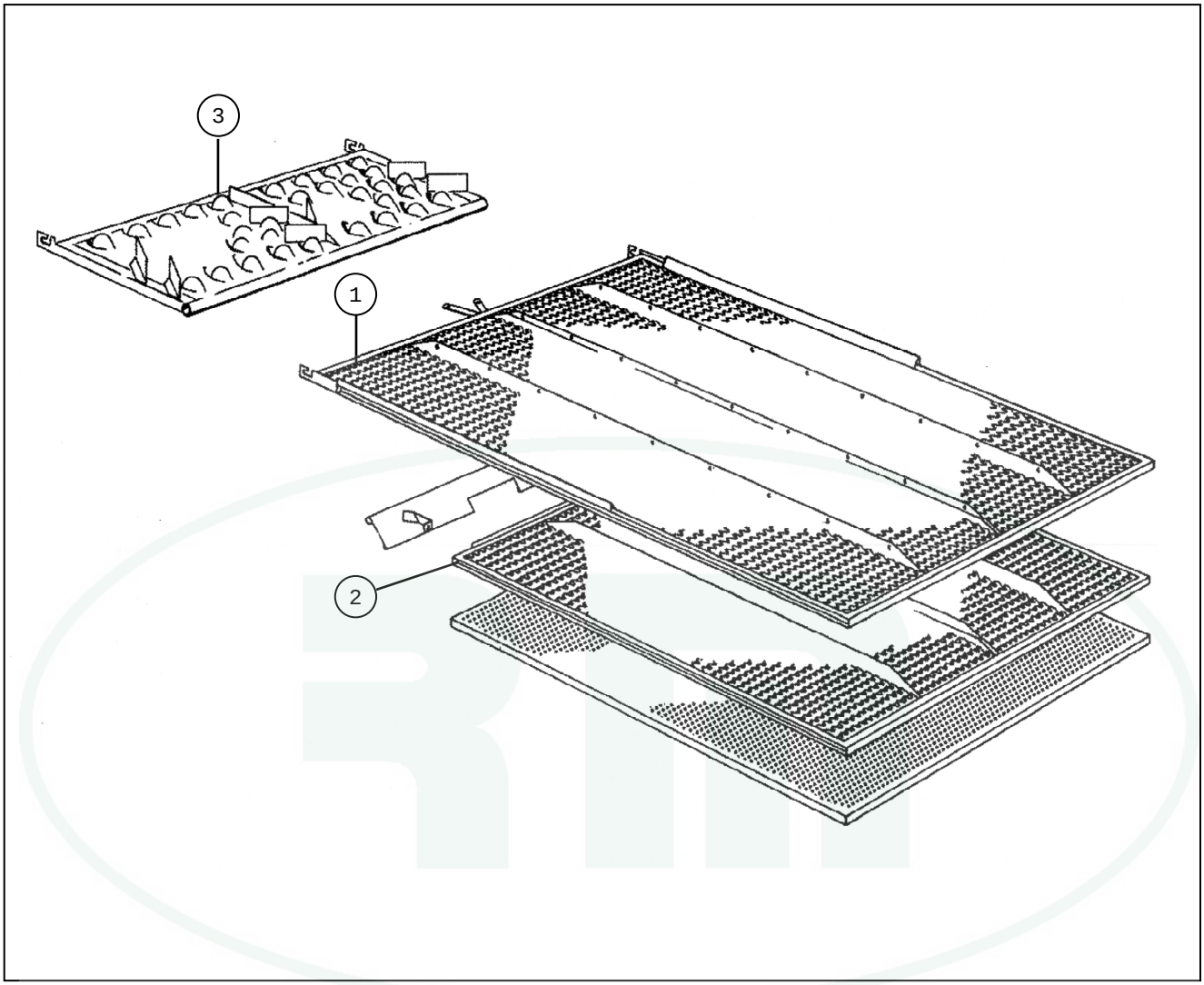

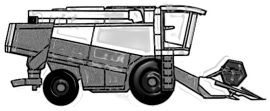

NEW HOLLAND

Pos.	Codice Originale	Codice RIMA	Descrizione Description	Applicazione Application	Conf. Pack.
			CRIVELLI *Sieves*		
	80338222	**RM11-091**	**Rubber bearing**	Tutti modelli	**10**
	84000052	**RM11-252**	**Rubber bearing**	80398810, 80190068 Tutti modelli	**10**
01		**RM11-380**	**Upper sieve**	TX62/63/64/65	**1**
		RM11-382	**Upper sieve**	TX66/68	**1**
	80030024	**RM11-357**	**Upper sieve**	1545	**1**
	80334146	**RM11-359**	**Upper sieve**	1540	**1**
	80384639	**RM11-364**	**Upper sieve**	1550	**1**
	80422502	**RM11-368**	**Upper sieve**	8030/8040	**1**
	80427000	**RM11-370**	**Upper sieve**	8060/8070	**1**
	80427002	**RM11-372**	**Upper sieve**	80388356, 8080	**1**
	80430148	**RM11-374**	**Upper sieve**	TX32/TX34/TF42/TF44	**1**
	80447562	**RM11-375**	**Upper sieve**	8055	**1**
	80453201	**RM11-379**	**Upper sieve**	TX36/TF46	**1**
02		**RM11-358**	**Lower sieve**	1545	**1**
		RM11-381	**Lower sieve**	TX62/63/64/65	**1**
		RM11-383	**Lower sieve**	TX66/68	**1**
	80336010	**RM11-362**	**Lower sieve**	1550	**1**
	80379922	**RM11-363**	**Lower sieve**	1540	**1**
	80422501	**RM11-367**	**Lower sieve**	8030/8040	**1**
	80426999	**RM11-369**	**Lower sieve**	80388357, 8080	**1**
	80427001	**RM11-371**	**Lower sieve**	8060/8070	**1**
	80429217	**RM11-373**	**Lower sieve**	TX32/TX34/TF42/TF44	**1**
	80450541	**RM11-377**	**Lower sieve**	8055	**1**
	80453193	**RM11-378**	**Lower sieve**	TX36/TF46	**1**
03	**80335951**	**RM11-360**	**Extension**	1540	**1**
	80335974	**RM11-361**	**Extension**	1545/1550	**1**
	80394894	**RM11-365**	**Extension**	8060/8070	**1**
	80422409	**RM11-366**	**Extension**	8030/8040	**1**
	80447690	**RM11-376**	**Extension**	8055	**1**

NEW HOLLAND

Elevatore – *Grain Elevator*

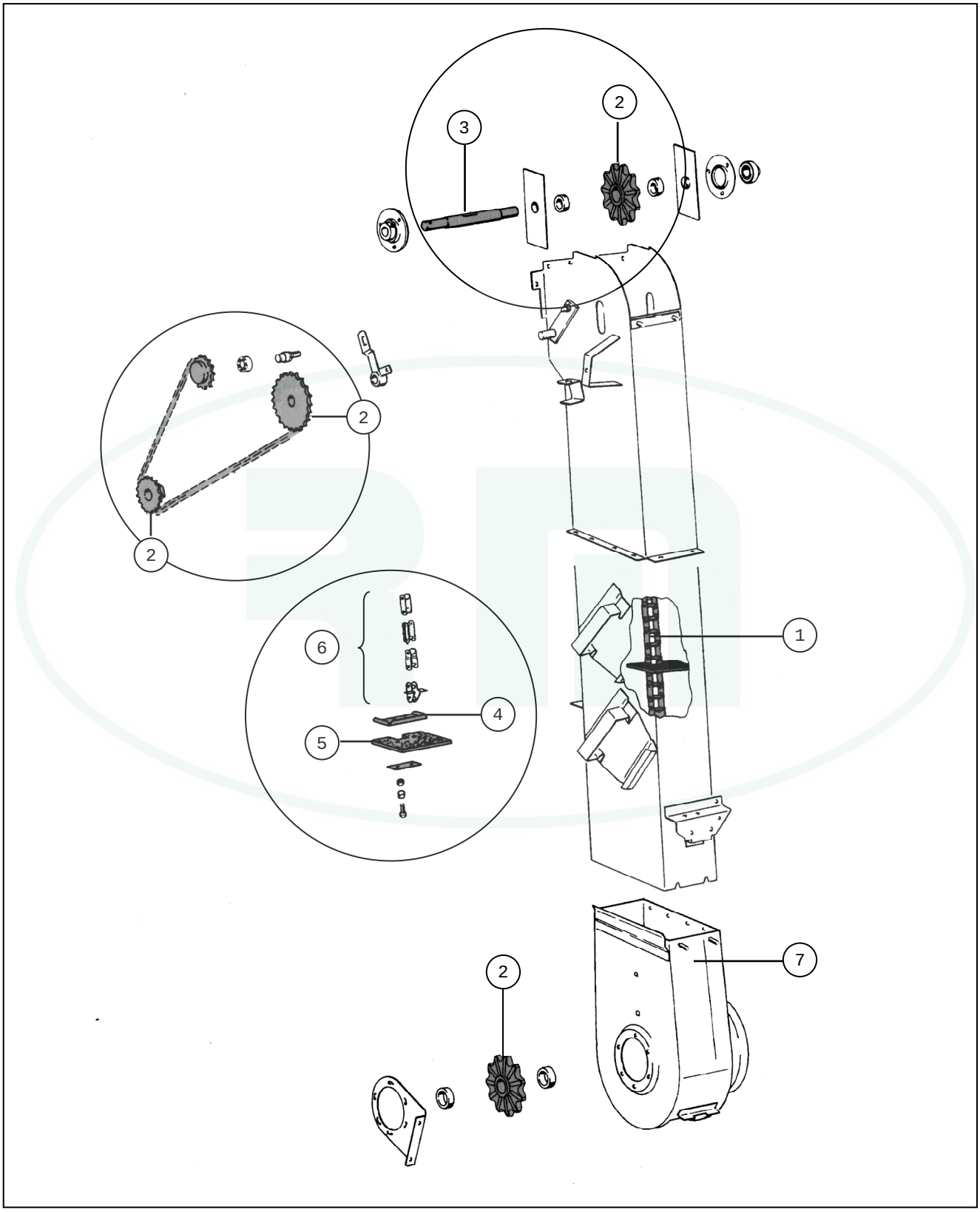

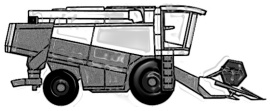

NEW HOLLAND

Pos.	Codice Originale	Codice RIMA	Descrizione Description	Applicazione Application	Conf. Pack.
			ELEVATORE *Elevator*		
01		RM11-394	Reinforced elevator chain	M103/133/135/140/1530/1540/1545/1550/803	1
		RM11-395	Reinforced elevator chain	M103/133/135/1530/1540/1545/1550	1
		RM11-396	Reinforced elevator chain	8050/8060/8070/8080	1
		RM11-397	Reinforced elevator chain	8050/8060/8070/8080	1
		RM11-398	Reinforced elevator chain	TX30/32/34/36/TF42/44/46	1
	80030006	RM11-384	Elevator chain	80333467, 80333478, 80230096/M103/133/13	1
	80335681	RM11-385	Elevator chain	80030009, 80230098 M103/133/135/1530/154	1
	80388558	RM11-386	Elevator chain	8050/8060/8070/8080	1
	80393697	RM11-387	Elevator chain	8050/8060/8070/8080	1
	80423639	RM11-388	Elevator chain	TC54/56	1
	80423641	RM11-389	Elevator chain	TC52/54/56	1
	80423915	RM11-390	Elevator chain	TC52	1
	80429215	RM11-391	Elevator chain	TX30/32/34/36/TF42/44/46	1
	84015232	RM11-392	Elevator chain	TX66/67/68/TF78	1
	84017638	RM11-393	Elevator chain	TX64/65/TF72-76	1
02	80270018	RM11-399	Sprocket	M103/133/135/140/1520/40/50	1
	80270029	RM11-289	Sprocket	M80/103/122/1520/1530/1545	1
	80270046	RM11-401	Sprocket	M103/133/135/140/1520/40/50	1
	80270063	RM11-402	Sprocket	M103/133/135/140/1520/40/50	1
	80321074	RM11-403	Sprocket	80421216, 1540/50/8030/40/55	1
	80417785	RM11-291	Sprocket	Serie 8000/TF/TX e 1545	1
	89507227	RM11-405	Sprocket	SerieTX30 e TF40	1
03	80170010	RM11-406	Key	Serie 1500	1
	80360677	RM11-407	Shaft	Serie 1500	1
	80417804	RM11-408	Shaft	Serie 8000	1
04	80324167	RM11-412	Plate	M103/M133/135/140/1520/1530/1540/1545/1	1
	80393694	RM11-409	Plate	8060/70/80 e serie TX/TF	1
	80481595	RM11-413	Plate	Serie TC	1
05		RM11-414	Rubber paddle	Serie M/1500/8000	10
		RM11-415	Rubber paddle	Serie TX e TF	10
	80451525	RM11-044	Rubber paddle		10
	84004821	RM11-057	Rubber paddle	80397984 - 8060/70/80 e Serie TX/TF	10
	84005086	RM11-056	Rubber paddle	80190084, 80397856 M103/133/135/140/1520	10
	84443928	RM11-560	Rubber paddle	Serie CX = 86547123	10
	89835453	RM11-089	Rubber paddle	Serie TX60 e TF70	10
06		RM11-423	Chain link	Serie M/1500/8000 serieTX30/TC	1
		RM11-424	Chain link	Serie M/1500/8000 serieTX30/TC	1

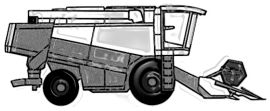

NEW HOLLAND

Pos.	Codice Originale	Codice RIMA	Descrizione Description	Applicazione Application	Conf. Pack.
06	80040241	RM11-347	Chain link	Serie TX60 e TF70	1
	80040242	RM11-417	Chain link	Serie TX60 e TF70	1
	80043278	RM11-348	Chain link	Serie TX60 e TF70	1
	80230028	RM11-419	Chain link	Serie M/1500/8000 serieTX30/TC	1
	80230030	RM11-420	Chain link	Serie M/1500/8000 serieTX30/TC	1
	80308278	RM11-421	Chain link	Serie M/1500/8000 serieTX30/TC	1
	80412031	RM11-422	Chain link	Serie M/1500/8000 serieTX30/TC	1
07	80280058	RM11-222	Clutch	1540/1550	1
	80280066	RM11-426	Clutch	1545	1

Notes

NEW HOLLAND

Trinciapaglia - *Straw Chopper*

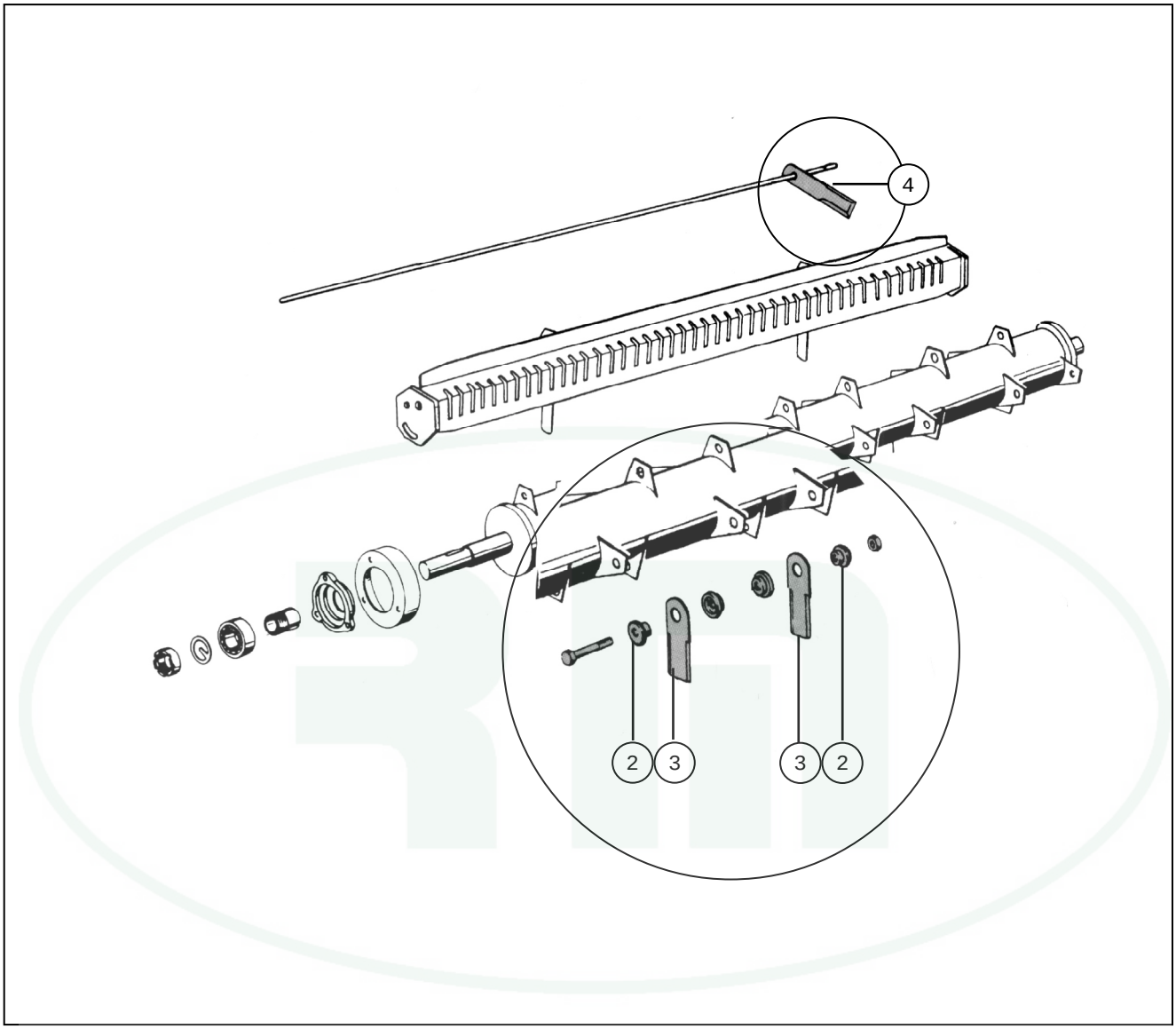

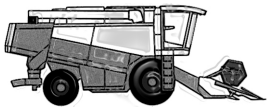

NEW HOLLAND

Pos.	Codice Originale	Codice RIMA	Descrizione Description	Applicazione Application	Conf. Pack.
			TRINCIAPAGLIA *Straw Chopper*		
02		RM39-042	Bushing		50
03	80468100	RM39-077	Straw chopper blade	287404100000	20
	80746812	RM39-032	Straw chopper blade		20
	80746813	RM39-033	Straw chopper blade		20
	80757465	RM39-002	Straw chopper blade		20
	84437624	RM39-082	Straw chopper blade	5mm.	20
	89510635	RM39-006	Straw chopper blade		20
04	89516450	RM39-008	Couterknife		20

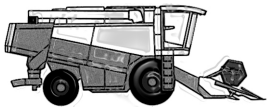

NEW HOLLAND

Pos.	Codice Originale	Codice RIMA	Descrizione Description	Applicazione Application	Conf. Pack.
			VARIE *Various*		
	80030009	RM11-481	Chain		1
	80030198	RM11-482	Chain		1
	80040697	RM11-436	Flange	Serie 1500/8000/TX/TF/TC	1
	80134107	RM11-008	Ball joint	Commando lama	1
	80170011	RM11-435	Key	Serie 1500/8000/TX/TF/TC	1
	80200214	RM11-483	Hub		1
	80260105	RM11-551	Shaft		1
	80270049	RM11-497	Sprocket		1
	80272548	RM11-107	Clutch disc		1
	80280059	RM11-552	Plate		1
	80290143	RM11-484	Pulley		1
	80309090	RM11-437	Nut	Serie 1500/8000/TX/TF/TC	1
	80320054	RM11-485	Flange		1
	80320055	RM11-486	Support		1
	80321068	RM11-487	Hub		1
	80321150	RM11-063	Ball joint	TV = 809817316	1
	80321151	RM11-062	Ball joint	TV	1
	80321488	RM11-488	Screw		1
	80321521	RM11-489	Disc		1
	80321522	RM11-490	Disc		1
	80321575	RM11-491	Shaft		1
	80322270	RM11-428	Tine	Serie 1500/8000/TX/TF/TC	1
	80325103	RM11-433	Bearing	Serie 1500/8000/TX/TF/TC	1
	80325106	RM11-432	Bearing	Serie 1500/8000/TX/TF/TC	1
	80326345	RM11-440	Sprocket	M122	1
	80327253	RM11-103	Clutch disc		1
	80327254	RM11-104	Clutch disc		1
	80327894	RM11-439	Sprocket	M122	1
	80330343	RM11-492	Chain		1
	80330412	RM11-493	Pivot		1
	80331496	RM11-494	Coupling		1
	80333380	RM11-495	Cover		1
	80333423	RM11-496	Cover		1
	80334019	RM11-498	Disc		1
	80334970	RM11-434	Support	Serie 1500/8000/TX/TF/TC	1
	80334975	RM11-438	Sprocket	Serie 1500	1
	80354785	RM11-499	Bolt		1
	80354786	RM11-500	Shaft		1
	80354787	RM11-501	Housing		1

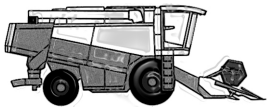

NEW HOLLAND

Pos.	Codice Originale	Codice RIMA	Descrizione Description	Applicazione Application	Conf. Pack.
	80362801	RM11-223	Clutch disc	Serie 1500/8000/TX/TF/TC	1
	80365962	RM11-504	Disc		1
	80370950	RM11-505	Bearing		1
	80375031	RM11-506	Pulley		1
	80376460	RM11-109	Brake disc		1
	80381512	RM11-110	Brake disc		1
	80381660	RM11-105	Clutch disc		1
	80381689	RM11-507	Shaft		1
	80381835	RM11-508	Shaft		1
	80384614	RM11-509	Support		1
	80384615	RM11-510	Support		1
	80385985	RM11-511	Coupling		1
	80387236	RM11-512	Sprocket		1
	80387505	RM11-513	Hydraulic pump		1
	80387865	RM11-514	Sprocket		1
	80387897	RM11-515	Auger		1
	80388062	RM11-516	Hub		1
	80388091	RM11-517	Spindle		1
	80388156	RM11-518	Disc		1
	80388255	RM11-519	Disc		1
	80388812	RM11-520	Shaft		1
	80391492	RM11-521	Plate		1
	80392329	RM11-522	Sprocket		1
	80392459	RM11-523	Guide		1
	80393677	RM11-524	Cover		1
	80394363	RM11-429	Clutch disc	Serie 1500/8000/TX/TF/TC	1
	80394507	RM11-525	Knife		1
	80394550	RM11-526	Shaft		1
	80395347	RM11-527	Sprocket		1
	80396442	RM11-528	Housing		1
	80397999	RM11-529	Gearbox		1
	80410960	RM11-431	Hub	Serie 1500/8000/TX/TF/TC	1
	80411208	RM11-530	Gear		1
	80411572	RM11-531	Shaft		1
	80417952	RM11-532	Sprocket		1
	80417953	RM11-533	Sprocket		1
	80420029	RM11-534	Plate		1
	80421866	RM11-535	Pin		1
	80424513	RM11-246	Brake disc		1
	80437030	RM11-536	Sprocket		1
	80438419	RM11-537	Flange		1

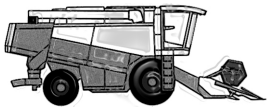

NEW HOLLAND

Pos.	Codice Originale	Codice RIMA	Descrizione Description	Applicazione Application	Conf. Pack.
	80440661	RM11-538	Pulley		1
	80442800	RM11-539	Hydraulic pump		1
	80445065	RM11-540	Auger		1
	80447013	RM11-541	Gearbox		1
	80448041	RM11-542	Sprocket		1
	80448132	RM11-543	Sprocket		1
	80450481	RM11-544	Hub		1
	80450679	RM11-545	Coupling		1
	80481991	RM11-546	Knife		1
	80482401	RM11-547	Disc		1
	80484477	RM11-548	Guide		1
	80740591	RM11-549	Shaft		1
	89509942	RM11-106	Clutch disc	410704	1
	89513300	RM11-108	Brake disc	322803	1
	89811139	RM11-550	Chain		1
	89811506	RM11-060	Ball joint	80090028	1

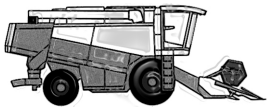

NEW HOLLAND

Pos.	Codice Originale	Codice RIMA	Descrizione Description	Applicazione Application	Conf. Pack.
			CINGHIE *Belts*		
	80015852		**Belt**		**1**
	80066232		**Belt**	8030 8040 8055 TC52 / TC54 / TC56	**1**
	80138495		**Belt**		**1**
	80168080		**Belt**		**1**
	80185471		**Belt**		**1**
	80186347		**Belt**	TF42 / TF44 TX32 TX36	**1**
	80226486		**Belt**		**1**
	80230037		**Belt**	M103 M80	**1**
	80230038		**Belt**	M103 M80 M89	**1**
	80230039		**Belt**	1550	**1**
	80230040		**Belt**	M103	**1**
	80230041		**Belt**	1530 1545 M103 M133 / M135 / M140	**1**
	80230042		**Belt**	M103 M80 M89	**1**
	80230043		**Belt**	1520 1530 1545 1550 M103 M122 M133 / M1	**1**
	80230044		**Belt**	M80 M89	**1**
	80230045		**Belt**	M103	**1**
	80230046		**Belt**	1520 M122 M80 M89	**1**
	80230048		**Belt**	M103 M80	**1**
	80230049		**Belt**	M103	**1**
	80230050		**Belt**	M103	**1**
	80230051		**Belt**	M103 M80 M89	**1**
	80230052		**Belt**	M103	**1**
	80230053		**Belt**	M103 M80 M89	**1**
	80230054		**Belt**	M103	**1**
	80230056		**Belt**	1530 1545 M103 M133 / M135 / M140	**1**
	80230057		**Belt**	1530 1545 8030 8040 8055 M103 M133 / M1	**1**
	80230059		**Belt**	1520 1530 1540 / 1540 AL 1545 M122 M133 /	**1**
	80230060		**Belt**	1530 1545 M103 M133 / M135 / M140 M80	**1**
	80230061		**Belt**	1520 M122 M133 / M135 / M140 M80 M89	**1**
	80230062		**Belt**	1530 1545 M103 M133 / M135 / M140	**1**
	80230063		**Belt**	M103	**1**
	80230064		**Belt**	M103	**1**
	80230065		**Belt**	M103	**1**
	80230066		**Belt**	M103	**1**
	80230068		**Belt**	M103	**1**
	80230069		**Belt**	M103	**1**
	80230070		**Belt**	M103	**1**
	80230071		**Belt**	M103	**1**
	80230073		**Belt**	1530 1545 M103 M133 / M135 / M140	**1**

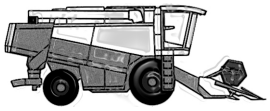

NEW HOLLAND

Pos.	Codice Originale	Codice RIMA	Descrizione Description	Applicazione Application	Conf. Pack.
	80230074		**Belt**	M103 M133 / M135 / M140 M80 M89	**1**
	80230075		**Belt**	M80 M89	**1**
	80230076		**Belt**	1520 8060 M103	**1**
	80230077		**Belt**	1530 1540 / 1540 AL 1545 8030 8040 8050 M	**1**
	80230078		**Belt**	1520 1530 1545 M103 M122 M133 / M135 /	**1**
	80230079		**Belt**	1520 M122 M80 M89	**1**
	80230080		**Belt**	1530 1545 M103 M133 / M135 / M140	**1**
	80230101		**Belt**	M122 M133 / M135 / M140	**1**
	80230103		**Belt**	1530 M133 / M135 / M140	**1**
	80230108		**Belt**	1530 1545 M133 / M135 / M140	**1**
	80230127		**Belt**	M103 M80 M89	**1**
	80230131		**Belt**	M80 M89	**1**
	80230143		**Belt**	TR70 TR75 TR85 TR86 TR95 TR96 TR97 TR	**1**
	80230151		**Belt**	8050 8060 8070 8080 M103	**1**
	80230154		**Belt**	M103	**1**
	80230161		**Belt**		**1**
	80230164		**Belt**	1540 / 1540 AL 1550 8040 TX32 TX36 TX62	**1**
	80230267		**Belt**	M80	**1**
	80246727		**Belt**	TR70 TR75 TR85	**1**
	80246978		**Belt**	TR75 / TR85	**1**
	80246980		**Belt**	TR70 TR75 TR85 TR95	**1**
	80247782		**Belt**	TR70 TR75 TR85	**1**
	80248332		**Belt**	TR70 TR75 TR86	**1**
	80254093		**Belt**	TR70 TR75 TR85	**1**
	80259477		**Belt**	TR75 TR85	**1**
	80261000		**Belt**	TR70	**1**
	80261000		**Belt**	TR75 / TR85	**1**
	80261001		**Belt**	TR75 / TR85	**1**
	80264557		**Belt**	TR70 TR75 TR85 TR95	**1**
	80284521		**Belt**	TR70	**1**
	80284521		**Belt**	TR75 / TR85	**1**
	80309087		**Belt**	M122 M133 / M135 / M140	**1**
	80309364		**Belt**	1530 1545 M133 / M135 / M140	**1**
	80320059		**Belt**	1550	**1**
	80320935		**Belt**	1540 / 1540 AL 1550	**1**
	80321559		**Belt**	8070	**1**
	80323413		**Belt**	1540 / 1540 AL 1550	**1**
	80323646		**Belt**	1540 / 1540 AL 1550	**1**
	80324391		**Belt**	1540 / 1540 AL 1550	**1**
	80326198		**Belt**		**1**
	80326298		**Belt**	1520 M122	**1**

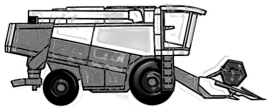

NEW HOLLAND

Pos.	Codice Originale	Codice RIMA	Descrizione Description	Applicazione Application	Conf. Pack.
	80326954		**Belt**	M122	**1**
	80327024		**Belt**	M133 / M135 / M140	**1**
	80327040		**Belt**	1520 M122	**1**
	80327041		**Belt**	1520 M122 M133 / M135 / M140	**1**
	80327062		**Belt**	M122	**1**
	80328424		**Belt**	1520 M122	**1**
	80330204		**Belt**	1520 M122	**1**
	80330441		**Belt**		**1**
	80330715		**Belt**	1520 1530 8030 8040 TC57	**1**
	80331094		**Belt**		**1**
	80333255		**Belt**	1520 1530 1540 / 1540 AL 1545 1550 8050 80	**1**
	80333347		**Belt**	1540 / 1540 AL 1550	**1**
	80333958		**Belt**	1540 / 1540 AL 1550	**1**
	80334065		**Belt**	1520 1530 1540 / 1540 AL 1545 1550 8050 80	**1**
	80335258		**Belt**	1540 / 1540 AL 1550	**1**
	80336386		**Belt**	1530 1540 / 1540 AL M133 / M135 / M140	**1**
	80336426		**Belt**	1530 M133 / M135 / M140	**1**
	80336610		**Belt**		**1**
	80336784		**Belt**	1540 / 1540 AL 1550 8030 8040 8050 8055 80	**1**
	80337415		**Belt**	1520 1530 1540 / 1540 AL 1545 1550 8050 80	**1**
	80350236		**Belt**	1540 / 1540 AL TF42 / TF44 TX30 TX32 TX3	**1**
	80353584		**Belt**	1540 / 1540 AL 1550	**1**
	80353882		**Belt**	1530	**1**
	80354115		**Belt**	1530 1540 / 1540 AL 8030 8040 8055 TC52 /	**1**
	80354338		**Belt**	1540 / 1540 AL 1550	**1**
	80355797		**Belt**	1540 / 1540 AL 1550	**1**
	80356024		**Belt**	8030 8040 8055 8060 TC52 / TC54 / TC56	**1**
	80356025		**Belt**	1550 8070	**1**
	80356913		**Belt**	1550	**1**
	80362500		**Belt**	1540 / 1540 AL 1550	**1**
	80364033		**Belt**	1550	**1**
	80364418		**Belt**	1520	**1**
	80367659		**Belt**		**1**
	80371222		**Belt**	1520 1530 1540 / 1540 AL 1545 8050 8060 80	**1**
	80378672		**Belt**	1540 / 1540 AL 1550	**1**
	80378989		**Belt**	8050 8060 8070 8080	**1**
	80381237		**Belt**	TF42 / TF44	**1**
	80381489		**Belt**	8050 8060 8070 8080	**1**
	80384397		**Belt**	8070 8080	**1**
	80386155		**Belt**	1530 1540 / 1540 AL	**1**
	80387452		**Belt**		**1**

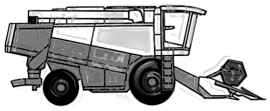

NEW HOLLAND

Pos.	Codice Originale	Codice RIMA	Descrizione Description	Applicazione Application	Conf. Pack.
	80387454		**Belt**	8070 8080	**1**
	80387460		**Belt**	8070 8080 TC57	**1**
	80387469		**Belt**	8030 8040 8050 8055 8060 8070 8080 TC52 /	**1**
	80387931		**Belt**	8080	**1**
	80388280		**Belt**	8050 8060 8070 8080	**1**
	80389245		**Belt**	8050 8060 8070 8080	**1**
	80391143		**Belt**	8080	**1**
	80391650		**Belt**	8070 8080	**1**
	80392134		**Belt**		**1**
	80392361		**Belt**		**1**
	80393326		**Belt**	8050 8060 8070 8080	**1**
	80393519		**Belt**	8030 8040 8055 8080	**1**
	80394426		**Belt**	8055 8060 8070	**1**
	80395955		**Belt**	8030 8040 8050 8055 8060 8070 8080	**1**
	80396750		**Belt**	8050 8060 8070 8080	**1**
	80397297		**Belt**	8050 8060	**1**
	80397298		**Belt**	8050 8060	**1**
	80398748		**Belt**	1540 / 1540 AL	**1**
	80399058		**Belt**	8050 8060	**1**
	80410896		**Belt**	8050 8060 8070 8080	**1**
	80411543		**Belt**	8070 8080	**1**
	80417643		**Belt**	8070	**1**
	80420349		**Belt**		**1**
	80420606		**Belt**		**1**
	80421173		**Belt**	8060 8070	**1**
	80422281		**Belt**	8030 8040	**1**
	80422441		**Belt**	8030 8040 8055	**1**
	80422725		**Belt**	8030	**1**
	80422731		**Belt**	8030 8040 8055 TC52 / TC54 / TC56	**1**
	80424318		**Belt**	8050	**1**
	80424563		**Belt**	8055 TC52 / TC54 / TC56 TC57	**1**
	80427455		**Belt**	8030 8040 8055	**1**
	80427456		**Belt**	8030 8040 8055	**1**
	80431784		**Belt**	8030 8040 8055 TC52 / TC54 / TC56 TC57	**1**
	80432060		**Belt**		**1**
	80432642		**Belt**	8080 TF42 / TF44	**1**
	80433639		**Belt**	TF42 / TF44 TX30 TX32 TX34 TX36	**1**
	80433746		**Belt**	TF42 / TF44 TX30 TX32 TX34	**1**
	80434044		**Belt**	TF42 / TF44	**1**
	80434045		**Belt**	TF42 / TF44	**1**
	80434046		**Belt**	TF42 / TF44	**1**

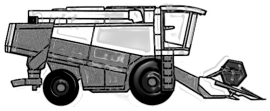

NEW HOLLAND

Pos.	Codice Originale	Codice RIMA	Descrizione Description	Applicazione Application	Conf. Pack.
	80434047		**Belt**	TF42 / TF44 TX34	**1**
	80434160		**Belt**	TF42 / TF44 TX30 TX32 TX34 TX36 TX62 /	**1**
	80434222		**Belt**	TF42 / TF44 TX32 TX34 TX36 TX62 / TX63 /	**1**
	80436304		**Belt**		**1**
	80437033		**Belt**	8070 8080	**1**
	80439129		**Belt**	8030 8040 8055 TC57	**1**
	80439495		**Belt**	TF42 / TF44	**1**
	80439496		**Belt**	TF42 / TF44	**1**
	80439832		**Belt**	TF42 / TF44 TX32 TX34	**1**
	80440780		**Belt**	TF42 / TF44 TX30 TX32 TX34	**1**
	80443634		**Belt**	8030 8040 8055 TX30 TX32 TX34 TX36	**1**
	80443636		**Belt**	8030 8040 8055	**1**
	80443775		**Belt**		**1**
	80444045		**Belt**	8030 8040 8055	**1**
	80445640		**Belt**	TF42 / TF44 TX30 TX32 TX34 TX36	**1**
	80446780		**Belt**	TX32 TX62 / TX63 / TX64 / TX65 / TX66 / T	**1**
	80446969		**Belt**	8055	**1**
	80446970		**Belt**	8040 8055	**1**
	80446971		**Belt**	8040 8055	**1**
	80447031		**Belt**	8030 8040 8055	**1**
	80447041		**Belt**	8030 8055	**1**
	80448794		**Belt**	TF42 / TF44 TX30 TX32 TX34 TX36 TX62 /	**1**
	80449380		**Belt**	TF42 / TF44	**1**
	80451481		**Belt**	8070 8080	**1**
	80452023		**Belt**		**1**
	80453268		**Belt**		**1**
	80454990		**Belt**	TX32 TX34	**1**
	80455865		**Belt**	TF42 / TF44 TX30 TX32 TX34 TX36 TX62 /	**1**
	80456216		**Belt**		**1**
	80457643		**Belt**		**1**
	80500594		**Belt**	TR75 / TR85	**1**
	80576771		**Belt**	TR75 / TR85	**1**
	80576771		**Belt**	TR70 TR75	**1**
	80576772		**Belt**	TR70 TR75	**1**
	80576776		**Belt**	TR70 TR75 TR85	**1**
	80603720		**Belt**		**1**
	80605529		**Belt**	8050 8060 8070 8080	**1**
	80612305		**Belt**	TR75 TR85 TR86	**1**
	80614040		**Belt**	TR75 TR85	**1**
	80619748		**Belt**	TR75 TR85	**1**
	80621104		**Belt**	TR70 TR75 TR85	**1**

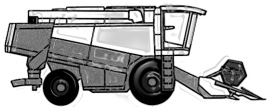

NEW HOLLAND

Pos.	Codice Originale	Codice RIMA	Descrizione Description	Applicazione Application	Conf. Pack.
	80640143		**Belt**	TR75 TR85 TR86	**1**
	80642569		**Belt**	TR75 TR85	**1**
	80643353		**Belt**	1545 8040 8050 8055	**1**
	80692974		**Belt**	TR95 TR96 TR97	**1**
	80703747		**Belt**	SWATHER 2450 / 2550-TR70 -TR75 TR85 T	**1**
	80708177		**Belt**		**1**
	80715785		**Belt**	TR70	**1**
	80716253		**Belt**	TR75 / TR85	**1**
	80716254		**Belt**	TR75 TR85 TR86 TR95 TR96	**1**
	80716414		**Belt**	TR75 / TR85	**1**
	80716414		**Belt**	TR75 TR85	**1**
	80716416		**Belt**	TR75 TR85	**1**
	80717699		**Belt**	TR75 / TR85	**1**
	80717700		**Belt**	TR75 TR85	**1**
	80717700		**Belt**	TR75 / TR85	**1**
	80719213		**Belt**	TR75 / TR85	**1**
	80719214		**Belt**	TR75 / TR85	**1**
	80743877		**Belt**	TF42 / TF44 TX34	**1**
	80746894		**Belt**		**1**
	80747177		**Belt**	9630 / 9640 / 9645 FX300 / FX375 / FX450	**1**
	80750166		**Belt**		**1**
	80750290		**Belt**		**1**
	80750318		**Belt**		**1**
	80753053		**Belt**	8040 8055 TC57	**1**
	80754165		**Belt**	TX34 TX62 / TX63 / TX64 / TX65 / TX66 / T	**1**
	80754285		**Belt**	TX30 TX32 TX34 TX36	**1**
	80754388		**Belt**	TX30 TX32 TX34 TX36 TX62 / TX63 / TX64	**1**
	80754389		**Belt**	TX30 TX32 TX34 TX36 TX62 / TX63 / TX64	**1**
	80754423		**Belt**		**1**
	80755803		**Belt**		**1**
	80755808		**Belt**	TC57	**1**
	80785415		**Belt**	TR75 TR85 TR86	**1**
	80788803		**Belt**	TR86	**1**
	80792809		**Belt**	TR86	**1**
	80824175		**Belt**	TC57	**1**
	80824176		**Belt**	TC57	**1**
	80824182		**Belt**	TC57	**1**
	80824518		**Belt**		**1**
	80825013		**Belt**	TC57	**1**
	80825117		**Belt**	TC57	**1**
	80825399		**Belt**		**1**

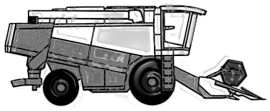

NEW HOLLAND

Pos.	Codice Originale	Codice RIMA	Descrizione Description	Applicazione Application	Conf. Pack.
	80849514		**Belt**	TR86 TR96	**1**
	80850752		**Belt**		**1**
	80912771		**Belt**	TX34	**1**
	80913151		**Belt**	TX30 TX32 TX36	**1**
	80913153		**Belt**	TX30 TX32 TX34 TX36	**1**
	80918402		**Belt**		**1**
	80919681		**Belt**		**1**
	80919739		**Belt**	CX 720 / 740 / 760 / 780 -CX 820 / 840 / 860 /	**1**
	80921330		**Belt**		**1**
	80921698		**Belt**	TX34	**1**
	80922872		**Belt**	TX30 TX32 TX34 TX36	**1**
	80922911		**Belt**	TX30 TX32 TX34 TX62 / TX63 / TX64 / TX6	**1**
	80923019		**Belt**	TX30 TX32 TX34 TX36	**1**
	80998403		**Belt**		**1**
	81865046		**Belt**		**1**
	82850752		**Belt**		**1**
	82850752		**Belt**		**1**
	84000838		**Belt**	TX62 / TX63 / TX64 / TX65 / TX66 / TX67 /	**1**
	84004443		**Belt**	TX62 / TX63 / TX64 / TX65 / TX66 / TX67 /	**1**
	84004444		**Belt**	TX62 / TX63 / TX64 / TX65 / TX66 / TX67 /	**1**
	84005417		**Belt**	TX62 / TX63 / TX64 / TX65 / TX66 / TX67 /	**1**
	84005860		**Belt**	TC52 / TC54 / TC56	**1**
	84007307		**Belt**	TX62 / TX63 / TX64 / TX65 / TX66 / TX67 /	**1**
	84011339		**Belt**		**1**
	84015531		**Belt**	TX62 / TX63 / TX64 / TX65 / TX66 / TX67 /	**1**
	84015852		**Belt**	TX62 / TX63 / TX64 / TX65 / TX66 / TX67 /	**1**
	84017621		**Belt**	TX62 / TX63 / TX64 / TX65 / TX66 / TX67 /	**1**
	84018864		**Belt**	TX62 / TX63 / TX64 / TX65 / TX66 / TX67 /	**1**
	84021588		**Belt**		**1**
	84021590		**Belt**		**1**
	84022715		**Belt**	TX62 / TX63 / TX64 / TX65 / TX66 / TX67 /	**1**
	84023277		**Belt**	CX 720 / 740 / 760 / 780 -CX 820 / 840 / 860 /	**1**
	84023278		**Belt**	CX 720 / 740 / 760 / 780 -CX 820 / 840 / 860 /	**1**
	84036070		**Belt**	TX62 / TX63 / TX64 / TX65 / TX66 / TX67 /	**1**
	84037964		**Belt**	TX62 / TX63 / TX64 / TX65 / TX66 / TX67 /	**1**
	84041518		**Belt**	TX62 / TX63 / TX64 / TX65 / TX66 / TX67 /	**1**
	84078581		**Belt**		**1**
	86518570		**Belt**		**1**
	86518570		**Belt**		**1**
	89501182		**Belt**	TX30 TX32 TX34 TX36	**1**
	89501863		**Belt**	TX34	**1**

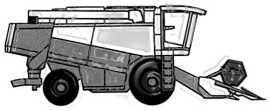

NEW HOLLAND

Pos.	Codice Originale	Codice RIMA	Descrizione Description	Applicazione Application	Conf. Pack.
	89502654		**Belt**	CX 720 / 740 / 760 / 780 -CX 820 / 840 / 860 /	**1**
	89504005		**Belt**	TX36	**1**
	89504547		**Belt**	TX36	**1**
	89505865		**Belt**		**1**
	89506463		**Belt**		**1**
	89506748		**Belt**	TX30 TX32 TX36	**1**
	89508557		**Belt**	TX36	**1**
	89508558		**Belt**	TX30 TX32	**1**
	89512971		**Belt**	TX30 TX32 TX36	**1**
	89513620		**Belt**	TX36 TX62 / TX63 / TX64 / TX65 / TX66 / T	**1**
	89513984		**Belt**	TX30 TX32 TX36 TX62 / TX63 / TX64 / TX6	**1**
	89514310		**Belt**	TC52 / TC54 / TC56	**1**
	89514311		**Belt**	TX62 / TX63 / TX64 / TX65 / TX66 / TX67 /	**1**
	89514989		**Belt**		**1**
	89514990		**Belt**		**1**
	89515075		**Belt**	TC52 / TC54 / TC56 TC57	**1**
	89515075		**Belt**		**1**
	89515076		**Belt**	TC52 / TC54 / TC56 TC57	**1**
	89544547		**Belt**		**1**
	89575059		**Belt**	TC57	**1**
	89575153		**Belt**	TC57	**1**
	89593400		**Belt**	TX62 / TX63 / TX64 / TX65 / TX66 / TX67 /	**1**
	89593418		**Belt**	TX62 / TX63 / TX64 / TX65 / TX66 / TX67 /	**1**
	89593440		**Belt**	TX62 / TX63 / TX64 / TX65 / TX66 / TX67 /	**1**
	89593464		**Belt**	TX62 / TX63 / TX64 / TX65 / TX66 / TX67 /	**1**
	89811151		**Belt**		**1**
	89811480		**Belt**		**1**
	89814069		**Belt**	TX62 / TX63 / TX64 / TX65 / TX66 / TX67 /	**1**
	89815396		**Belt**		**1**
	89815437		**Belt**		**1**
	89817249		**Belt**	TC52 / TC54 / TC56	**1**
	89817250		**Belt**	TC52 / TC54 / TC56	**1**
	89817374		**Belt**	TC52 / TC54 / TC56	**1**
	89817375		**Belt**		**1**
	89817439		**Belt**		**1**
	89817454		**Belt**	TX62 / TX63 / TX64 / TX65 / TX66 / TX67 /	**1**
	89817487		**Belt**	TC52 / TC54 / TC56	**1**
	89817488		**Belt**	TC52 / TC54 / TC56	**1**
	89817814		**Belt**		**1**
	89817959		**Belt**	TX62 / TX63 / TX64 / TX65 / TX66 / TX67 /	**1**
	89818570		**Belt**		**1**

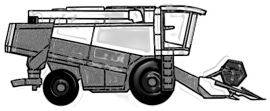

NEW HOLLAND

Pos.	Codice Originale	Codice RIMA	Descrizione Description	Applicazione Application	Conf. Pack.
	89818704		**Belt**	TC52 / TC54 / TC56	**1**
	89818705		**Belt**	TC52 / TC54 / TC56	**1**
	89818830		**Belt**	TX62 / TX63 / TX64 / TX65 / TX66 / TX67 /	**1**
	89818873		**Belt**	TC52 / TC54 / TC56	**1**
	89819508		**Belt**		**1**
	89819509		**Belt**		**1**
	89819676		**Belt**		**1**
	89831515		**Belt**	TC52 / TC54 / TC56	**1**
	89831571		**Belt**	TX62 / TX63 / TX64 / TX65 / TX66 / TX67 /	**1**
	89832309		**Belt**	TX62 / TX63 / TX64 / TX65 / TX66 / TX67 /	**1**
	89832601		**Belt**	TX62 / TX63 / TX64 / TX65 / TX66 / TX67 /	**1**
	89833619		**Belt**	TX62 / TX63 / TX64 / TX65 / TX66 / TX67 /	**1**
	89833888		**Belt**		**1**
	89835120		**Belt**	TC52 / TC54 / TC56	**1**
	89835683		**Belt**	TX62 / TX63 / TX64 / TX65 / TX66 / TX67 /	**1**
	89835743		**Belt**	TX62 / TX63 / TX64 / TX65 / TX66 / TX67 /	**1**
	89835816		**Belt**	CX 720 / 740 / 760 / 780 -CX 820 / 840 / 860 /	**1**
	89835876		**Belt**	TX62 / TX63 / TX64 / TX65 / TX66 / TX67 /	**1**
	89837412		**Belt**	TC52 / TC54 / TC56	**1**
	89838606		**Belt**	TC52 / TC54 / TC56 TC57	**1**
	89839030		**Belt**	TX62 / TX63 / TX64 / TX65 / TX66 / TX67 /	**1**
	89839375		**Belt**	TC52 / TC54 / TC56	**1**
	89850261		**Belt**	TX62 / TX63 / TX64 / TX65 / TX66 / TX67 /	**1**
	89850770		**Belt**	TX62 / TX63 / TX64 / TX65 / TX66 / TX67 /	**1**
	89850782		**Belt**	TC52 / TC54 / TC56	**1**
	898508587		**Belt**		**1**

MASSEY FERGUSON

Barra di Taglio - *Cutting Bar*

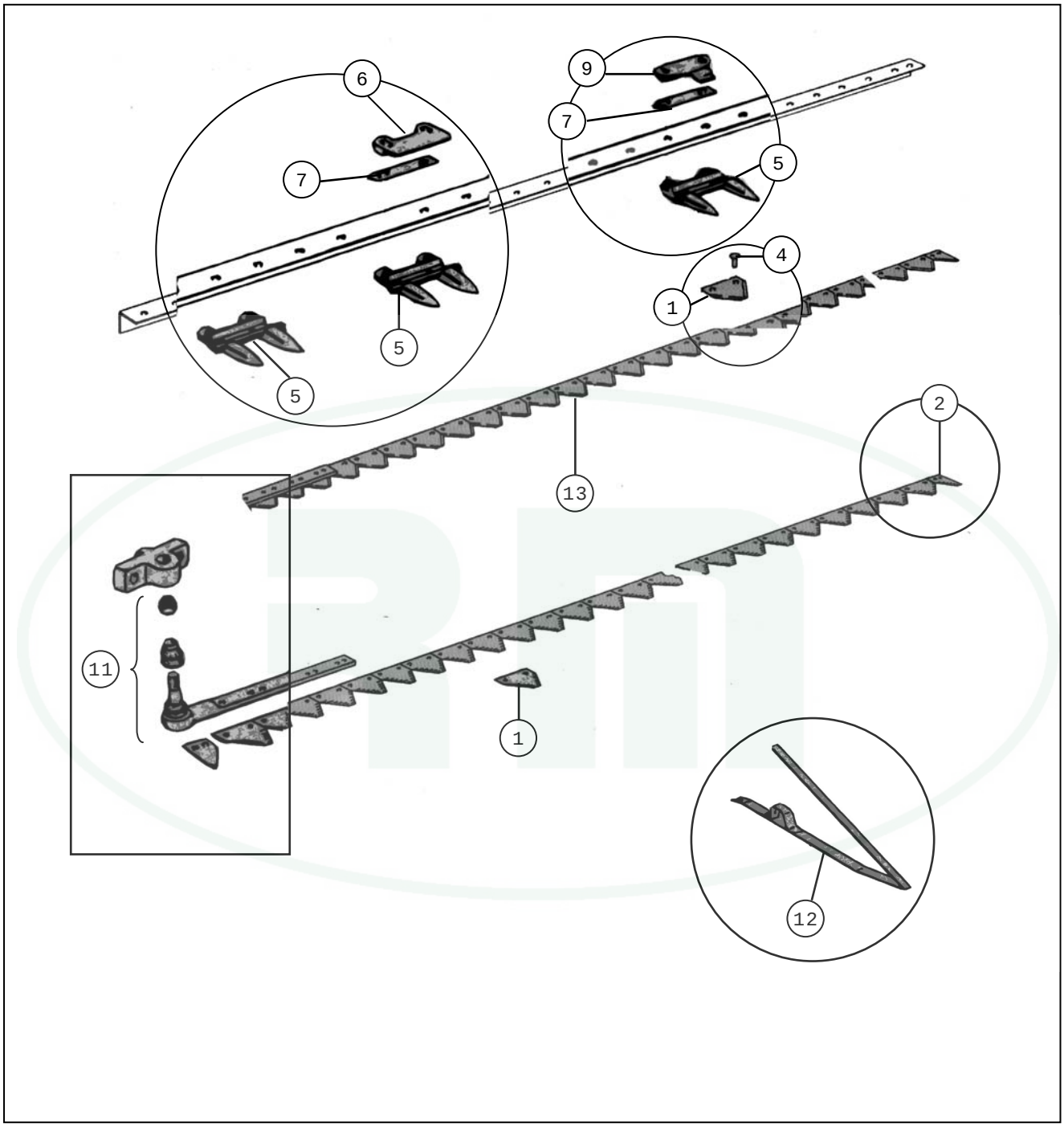

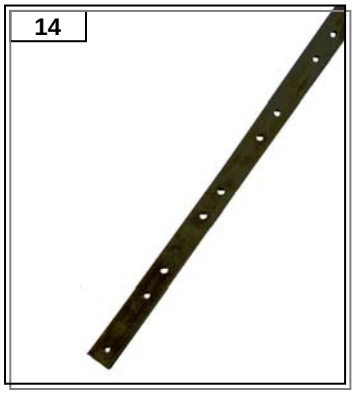

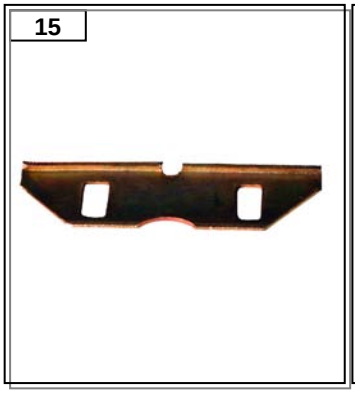

US = rigata sotto
TS = rigata sopra

TTQST = testa tonda quadro sotto t.
TT = testa tonda
TPSV = testa piana svasata

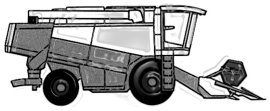

MASSEY FERGUSON

Pos.	Codice Originale	Codice RIMA	Descrizione Description	Applicazione Application	Conf. Pack.
			BARRA DI TAGLIO *Cutterbar*		
01	206235M1	RM24-004	Knife section	2,0 mm.	25
	206236M1	RM24-003	Knife section	2,0 mm.	25
	206237M1	RM24-101	Knife section	2,7 mm.	25
	3317617M1	RM24-047	Knife section	2,7mm. - F27	25
	44100000	RM50-001	Knife section	MF 34/38/40 - 2,7 mm.	25
	44103700	RM50-002	Knife section	MF 34/38/40 - 2,7 mm.	25
02	3099586M91	RM24-046	Half section	iniziale	1
	44103800	RM50-003	Half section	MF 34/38/40 - finale	1
	44104000	RM50-004	Half section	MF 34/38/40 - iniziale	1
	647116M1	RM24-002	Half section	SX	1
	790863M1	RM24-001	Half section	DX	1
04		RM24-100	Rivet		2
	40402400	RM50-080	Bolt	MF 34/38/40 - 6X16 - 41087400	100
	41306100	RM50-055	Rivet	MF 34/38/40 - 6X16	2
	41306200	RM50-096	Rivet	MF 34/38/40 - 6X28	2
	41377500	RM50-097	Rivet	MF 34/38/40 - 5,3x14/15/18/32	2
05	44104500	RM50-005	Double finger	MF 34/38/40 - 44102900	1
	44104600	RM50-007	Double finger	MF 34/38/40 - 28260535	1
	44104700	RM50-006	Double finger	MF 34/38/40 - 28260531	1
	609993M91	RM24-006	Double finger		1
	640590M91	RM24-005	Double finger		1
06	28260362	RM50-013	Knife clip	MF 34/38/40	10
07	28230120	RM50-014	Knife clip	MF 34/38/40	1
09		RM1402	Knife clip - RM knives	RM24-037	10
	206195M1	RM24-007	Knife clip		10
	28200961	RM50-011	Knife clip	MF 34/38/40	10
	28283934	RM50-012	Knife clip	MF 34/38/40	10
11	1724499M1	RM24-218	Knife head		1
	228589M1	RM24-021	Knife head		1
	28280147	RM50-010	Knife head	MF 34/38/40	1
	28283011	RM50-008	Knife head	MF 34/38/40	1
	3099334M1	RM24-053	Head extension		1
	3225559M1	RM24-055	Support		1
	3225570M1	RM24-052	Knife head		1
	44120000	RM50-009	Knife head	MF 34/38/40	1
	831225M1	RM24-056	O ring		1
	833261M1	RM24-054	Bearing		1

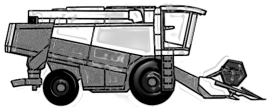

MASSEY FERGUSON

Pos.	Codice Originale	Codice RIMA	Descrizione Description	Applicazione Application	Conf. Pack.
12	303557M1	RM24-036	Crop lifter	ASX127	1
	49040000	RM50-029	Crop lifter	MF 34/38/40	1
	49040200	RM50-030	Crop lifter	MF 34/38/40	1
	49040300	RM50-031	Crop lifter	MF 34/38/40	1
	49040600	RM50-093	Holder	MF 34/38/40	1
13	228577M91	RM24-019	Complete knife		1
	228578M91	RM24-020	Complete knife		1
	28201054	RM50-072	Complete knife	MF 34/38/40	1
	28230007	RM50-027	Complete knife	MF 34/38/40	1
	28230008	RM50-026	Complete knife	MF 34/38/40	1
	28230040	RM50-074	Complete knife	MF 34/38/40	1
	28230753	RM50-073	Complete knife	MF 34/38/40	1
	28281492	RM50-028	Complete knife	MF 34/38/40	1
	28283009	RM50-019	Complete knife	MF 34/38/40	1
	28283010	RM50-020	Complete knife	MF 34/38/40	1
	28283306	RM50-016	Complete knife	MF 34/38/40	1
	28283307	RM50-017	Complete knife	MF 34/38/40	1
	28283308	RM50-018	Complete knife	MF 34/38/40	1
	28283865	RM50-021	Complete knife	MF 34/38/40	1
	28285042	RM50-071	Complete knife	MF 34/38/40	1
	3099224M92	RM24-057	Complete knife		1
	3099225M92	RM24-058	Complete knife		1
	3099226M92	RM24-059	Complete knife		1
	3099905M91	RM24-073	Complete knife		1
	3099907M91	RM24-074	Complete knife		1
	3099918M91	RM24-075	Complete knife		1
	3470264M91	RM24-050	Complete knife		1
	402320M93	RM24-220	Complete knife	Finlandia	1
14		RM24-018	Knife back		1
		RM50-040	Knife back		1
		RM50-045	Knife back	MF34/38/40 - 20x6x3700	1
		RM50-046	Knife back	MF 34/38/40 - 20x6x4300	1
		RM50-047	Knife back	MF34/38/40 - 20x6x4950	1
		RM50-048	Knife back	MF34/38/40 - 20x6x5550	1
		RM50-049	Knife back	MF 34/38/40 - 20x6x6150	1
		RM50-050	Knife back	MF 34/38/40 - 20x6x6700	1
		RM50-051	Knife back	MF34/38/40 - 20x6x6150	1
		RM50-052	Knife back	MF 34/38/40 - 20x6x4950	1
		RM50-053	Knife back	MF 34/38/40 - 20x6x4300	1
	228578	RM24-015	Knife back		1

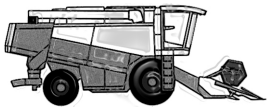

MASSEY FERGUSON

Pos.	Codice Originale	Codice RIMA	Descrizione Description	Applicazione Application	Conf. Pack.
14	228590	RM24-016	Knife back		1
	228591	RM24-017	Knife back		1
15	206196M1	RM24-008	Wearing plate		1
16	789351M1	RM24-022	Finger plate	C.2405 = 206280M1	25

Coclea - *Auger*

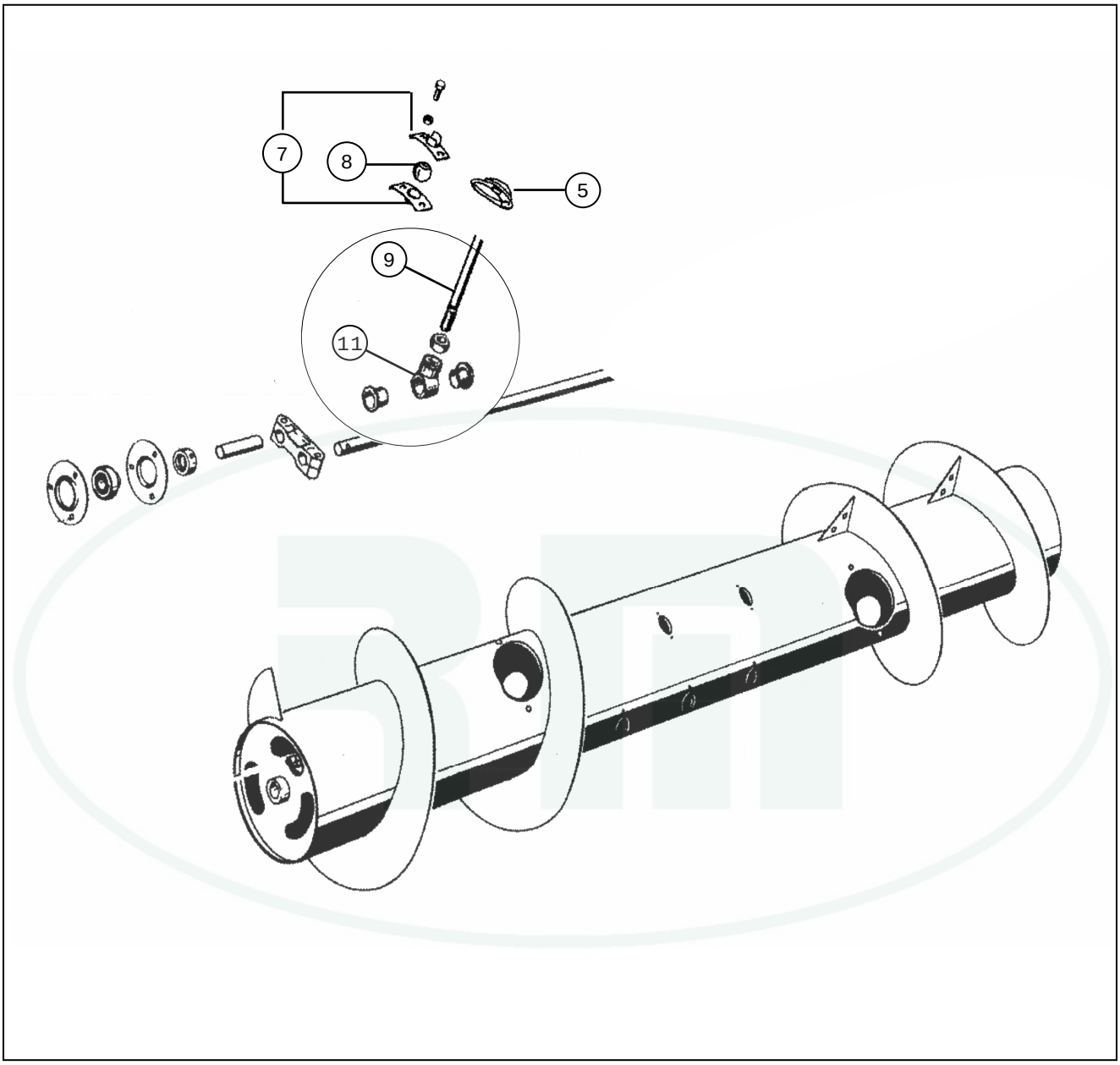

Aspo – *Reel Tines*

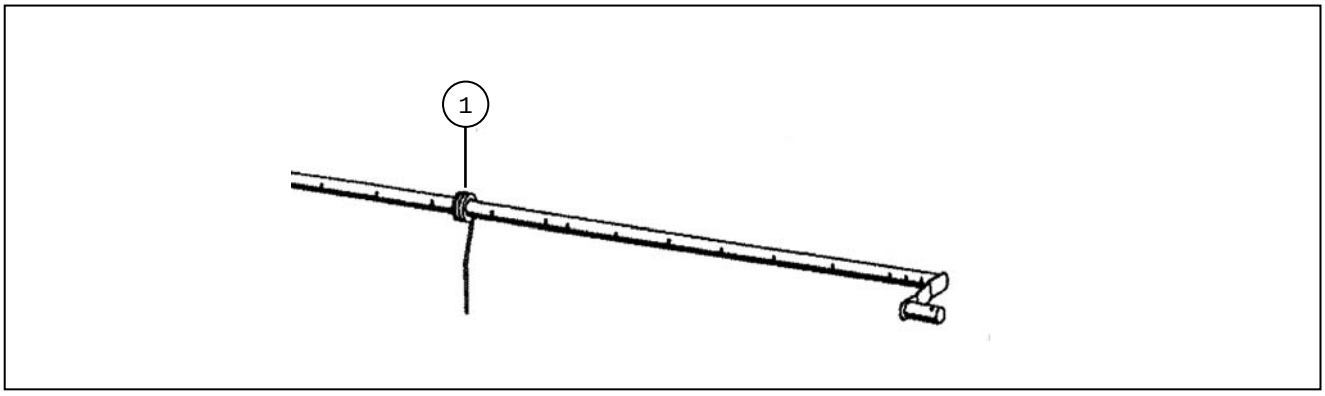

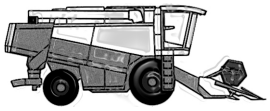

MASSEY FERGUSON

Pos.	Codice Originale	Codice RIMA	Descrizione Description	Applicazione Application	Conf. Pack.
			COCLEA *Auger*		
05	264067M1	RM24-072	Finger guide		25
	28283060	RM50-039	Finger guide	MF 34/38/40	25
07	219439/40M2	RM24-009	Support kit	A19913/14	1
08	238796M1	RM24-011	Guide ball	785455M1 - 320817	1
	28260314	RM50-035	Guide ball	MF 34/38/40 - dito 16mm.	1
	43388400	RM50-036	Guide ball	MF 34/38/40 - dito 14mm.	1
09	1483627M2	RM24-065	Retractable finger		10
	231321M91	RM24-012	Retractable finger		10
	238797M1	RM24-013	Retractable finger	14x220 - 794790M1	10
	28250566	RM50-033	Retractable finger	MF 34/38/40 - 14x245	10
	28283815	RM50-034	Retractable finger	MF 34/38/40 - 16x245	10
	3099689M1	RM24-063	Retractable finger		10
	3319934M1	RM24-062	Retractable finger	16x250	10
11	28250585	RM50-037	T bushing	MF 34/38/40 - diam. 14	10
	28251831	RM50-038	T bushing	MF 34/38/40 - diam. 16	10
			ASPO *Reel Tines*		
01	2710277M1	RM24-125	Reel tine		20
	2710280M1	RM24-066	Reel tine		20
	28350208	RM50-066	Reel tine	MF 34/38/40	20
	28350257	RM50-065	Reel tine	MF 34/38/40	20
	28680130	RM50-063	Reel tine	MF 34/38/40	20
	28680131	RM50-064	Reel tine	MF 34/38/40	20
	914978M1	RM24-217	Reel tine		20

MASSEY FERGUSON

Alimentazione - *Feeder Channel*

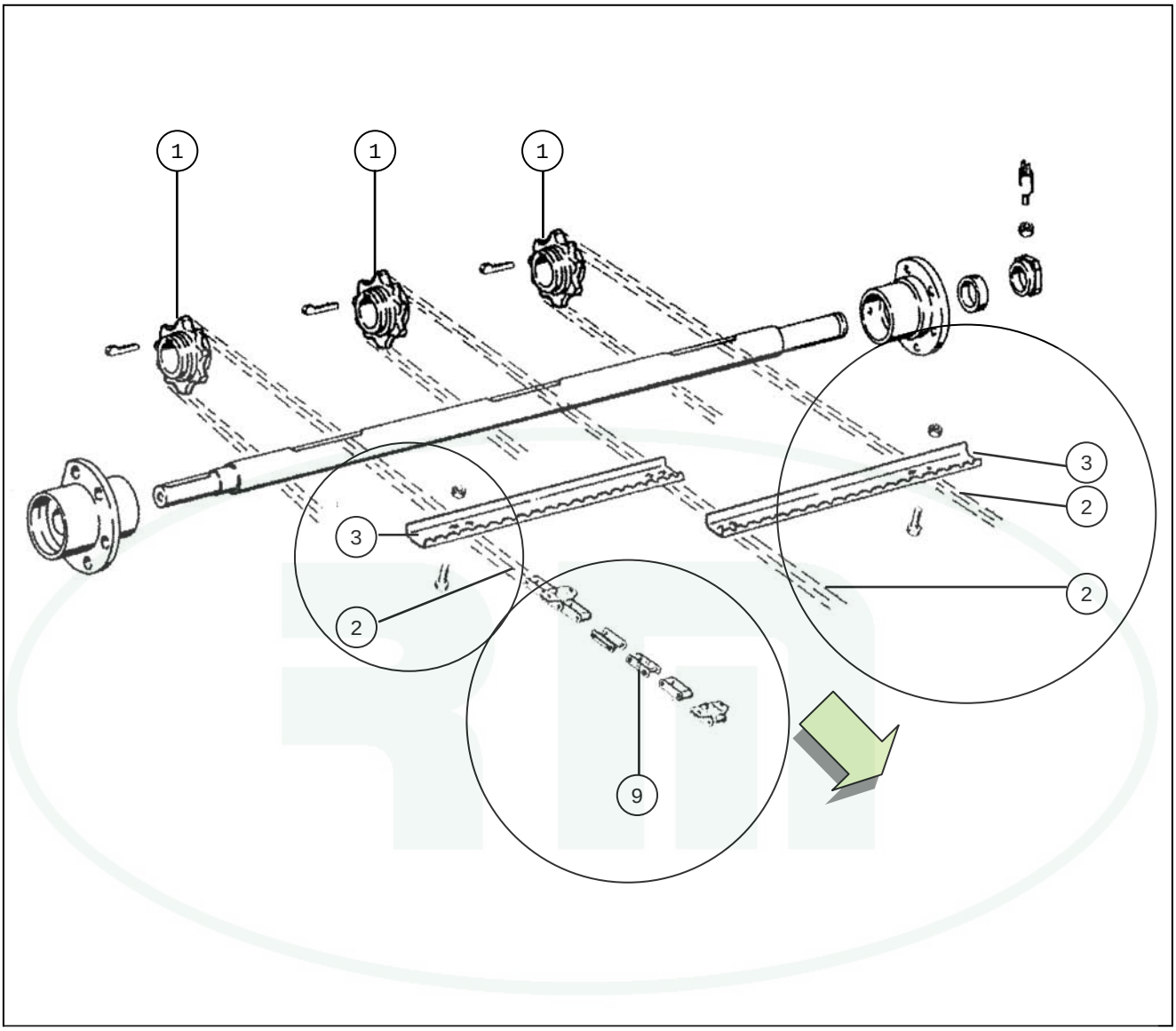

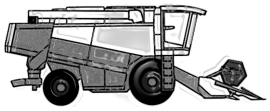

MASSEY FERGUSON

Pos.	Codice Originale	Codice RIMA	Descrizione Description	Applicazione Application	Conf. Pack.
			ALIMENTAZIONE *Feeder Channel*		
01	27500322	RM50-087	Sprocket	MF 34/38/40	1
	28510012	RM50-056	Sprocket	MF 34/38/40	1
	28560008	RM50-057	Sprocket	MF 34/38/40	1
02	28280302	RM50-081	Feeder chain	MF34	1
03	28281555	RM50-086	Chain lath	MF34 / DRONN-8900	1
	28281556	RM50-085	Chain lath	MF38/40	1
	28281794	RM50-083	Chain lath	MF38/40	1
	28281795	RM50-084	Chain lath	MF38/40	1
09	42351400	RM50-082	Chain link		1

MASSEY FERGUSON

Battitore – *Treshing Device*

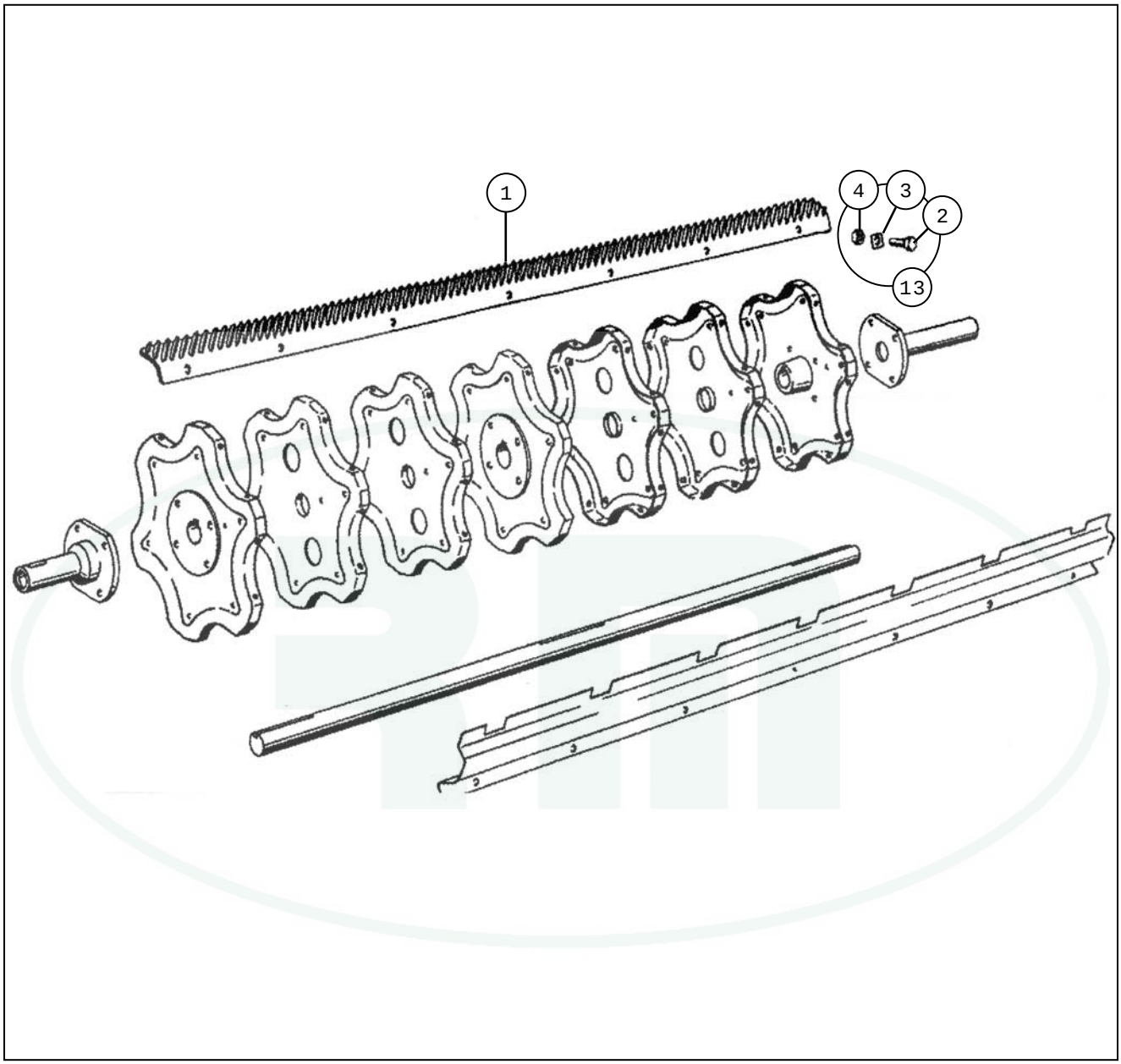

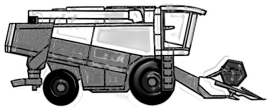

MASSEY FERGUSON

Pos.	Codice Originale	Codice RIMA	Descrizione Description	Applicazione Application	Conf. Pack.
			BATTITORE *Treshing Device*		
01	1722380	RM24-114	Rasp bar set	MF507/440/487	1
	1722381	RM24-115	Rasp bar set	MF507/440/487	1
	259070	RM24-109	Rasp bar set	MF750	1
	259072	RM24-110	Rasp bar set	MF750	1
	274227	RM24-035	Rasp bar set	MF760	1
	274229	RM24-104	Rasp bar set	MF760	1
	28340114	RM50-022	Rasp bar set	MF31	1
	28340115	RM50-075	Rasp bar set	MF31	1
	28350242	RM50-023	Rasp bar set	MF29/27	1
	28350243	RM50-076	Rasp bar set	MF29/27/34/38/40	1
	28380087	RM50-025	Rasp bar set	MF38/40 - 28080861/2	1
	28380088	RM50-078	Rasp bar set	MF38/40 - 28080861/2	1
	28382008	RM50-024	Rasp bar set	MF34/36	1
	28382009	RM50-077	Rasp bar set	MF34/36	1
	3049769	RM24-116	Rasp bar set	MF530/560/565	1
	3049771	RM24-117	Rasp bar set	MF530/560/565	1
	3373370	RM24-118	Rasp bar set	MF660/665	1
	3373371	RM24-119	Rasp bar set	MF560/565/530	1
	3376543	RM24-120	Rasp bar set	MF660/665	1
	3376544	RM24-121	Rasp bar set	MF560/565/530	1
	412289	RM24-028	Rasp bar set	MF186/86/87	1
	412290	RM24-103	Rasp bar set	MF186/86/87	1
	911670	RM24-031	Rasp bar set	MF510/520/525	1
	911671	RM24-105	Rasp bar set	MF510/520/525	1
	914958	RM24-033	Rasp bar set	MF510/520	1
	914959	RM24-107	Rasp bar set	MF510/520	1
	914960	RM24-032	Rasp bar set	MF620	1
	914961	RM24-106	Rasp bar set	MF620	1
	914962	RM24-034	Rasp bar set	MF620	1
	914963	RM24-108	Rasp bar set	MF620	1
	916823	RM24-113	Rasp bar set	MF187/206/240/307	1
	916824	RM24-112	Rasp bar set	MF187/206/240/307	1
02	40425000	RM50-094	Screw		50
03	20400424	RM50-098	Washer		1
04	41087700	RM50-095	Nut		50
12	213057M3	RM24-023	Spike tooth		1
13		RM24-122	Bolt		1

MASSEY FERGUSON

Elevatore – *Grain Elevator*

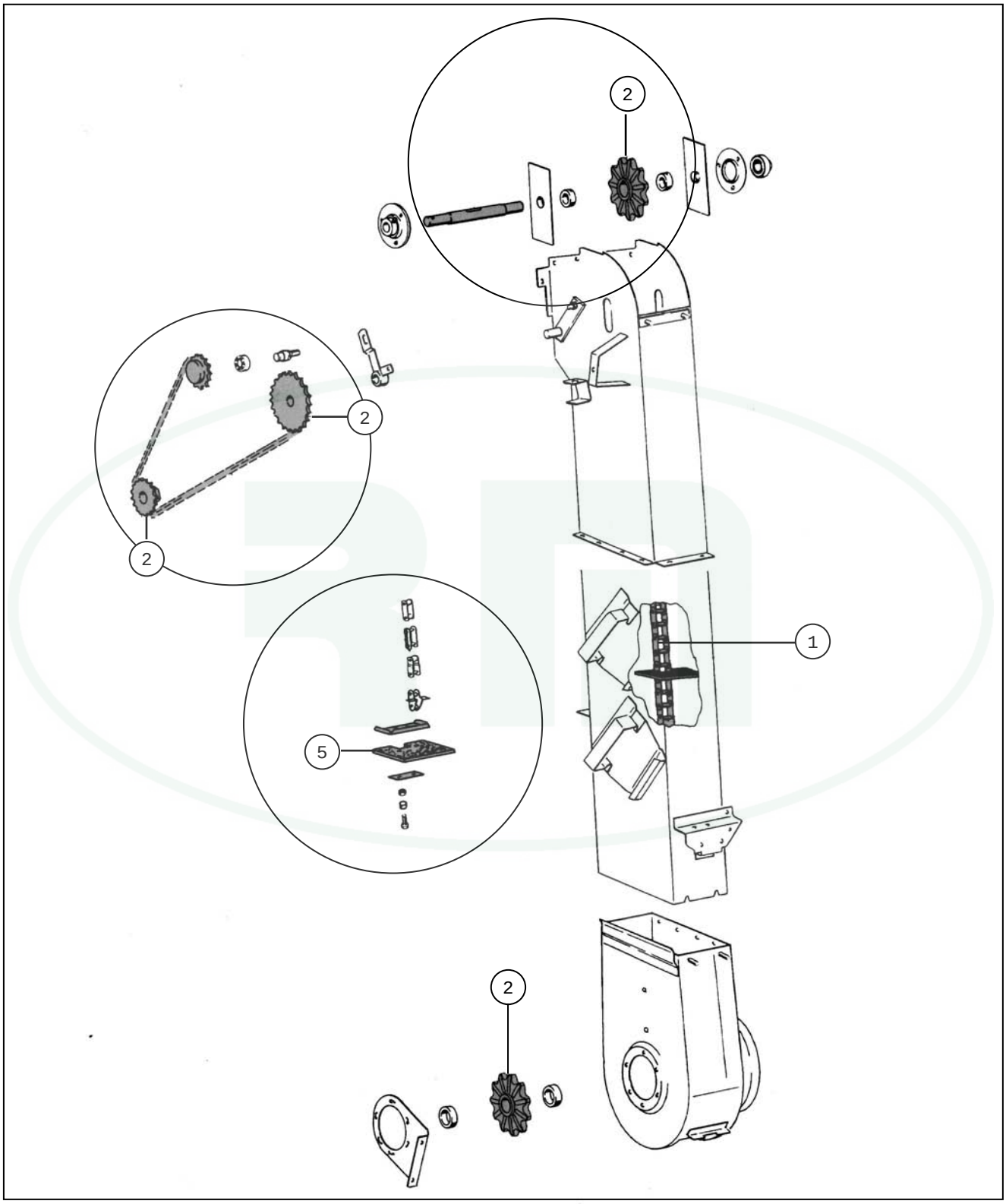

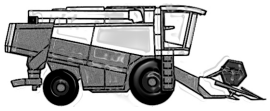

MASSEY FERGUSON

Pos.	Codice Originale	Codice RIMA	Descrizione Description	Applicazione Application	Conf. Pack.
			ELEVATORE *Elevator*		
01		RM50-090	Elevator chain	MF31	1
		RM50-091	Elevator chain	MF31	1
		RM50-092	Elevator chain	MF31	1
	28580135	RM50-088	Elevator chain	NORMALE- MF34/38/40 D-8900	1
	28580225	RM50-089	Elevator chain	MF34/38/40 D-8900	1
02	28580448	RM50-058	Sprocket	28580202	1
05	28550373	RM50-059	Rubber paddle	619298 - 115x76	10
	28580137	RM50-060	Rubber paddle	028937 - 150x95	10
	28585021	RM50-250	Rubber paddle	MF 34/38/40	1

MASSEY FERGUSON

Trinciapaglia - *Straw Chopper*

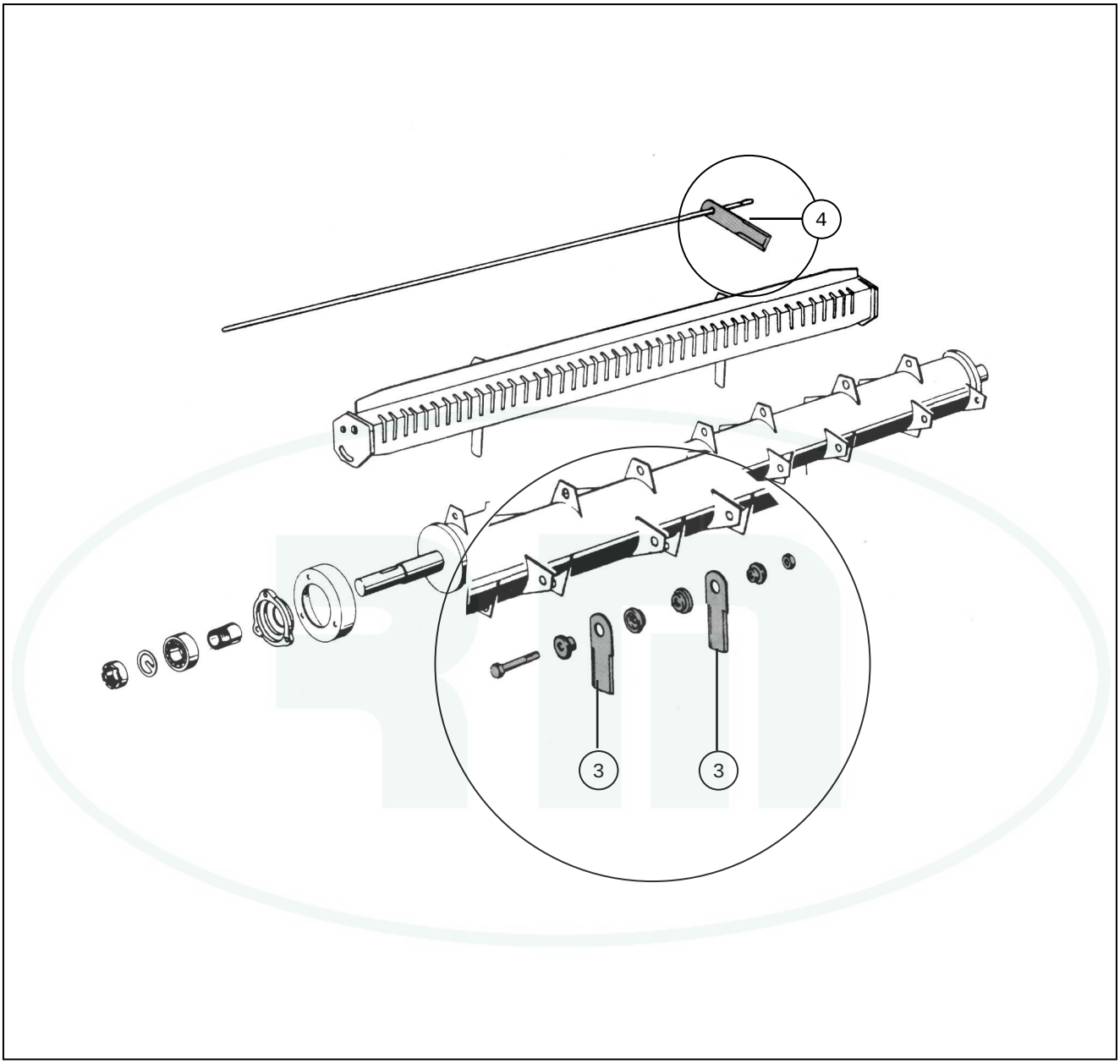

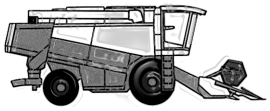

MASSEY FERGUSON

Pos.	Codice Originale	Codice RIMA	Descrizione Description	Applicazione Application	Conf. Pack.
			TRINCIAPAGLIA *Straw Chopper*		
03		**RM39-010**	**Straw chopper blade**		**20**
		RM39-006	**Straw chopper blade**		**20**
	1730728M2	**RM39-048**	**Straw chopper blade**		**20**
	49005700	**RM39-043**	**Counterknife**	MF 34/38/40	**20**
	49017800	**RM39-044**	**Straw chopper blade**	MF 34/38/40	**20**
	49018300	**RM39-045**	**Straw chopper blade**	MF 34/38/40	**20**
	49018900	**RM39-046**	**Straw chopper blade**	MF 34/38/40	**20**
	49019000	**RM39-047**	**Straw chopper blade**	MF 34/38/40	**20**
	49080066	**RM39-061**	**Straw chopper blade**	MF 34/38/40	**20**
04		**RM39-008**	**Counterknife**		**20**

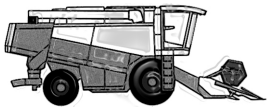

MASSEY FERGUSON

Pos.	Codice Originale	Codice RIMA	Descrizione Description	Applicazione Application	Conf. Pack.
			VARIE *Various*		
	1022303M1	**RM24-024**			**1**
	1826555M1	**RM24-025**			**1**
	18885495M1	**RM24-027**			**1**
	55460M1	**RM24-026**			**1**

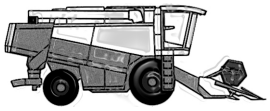

MASSEY FERGUSON

Pos.	Codice Originale	Codice RIMA	Descrizione Description	Applicazione Application	Conf. Pack.
			CINGHIE *Belts*		
	101102M1		**Belt**	8560 8570	**1**
	1033078M1		**Belt**	300	**1**
	103319M1		**Belt**	8570	**1**
	103320M1		**Belt**	8570	**1**
	1047702M1		**Belt**	540 550	**1**
	1051235M1		**Belt**	550	**1**
	1056409M1		**Belt**	SWATHER 885-	**1**
	1056423M1		**Belt**	SWATHER 885-	**1**
	1056877M1		**Belt**	SWATHER 885-	**1**
	1056914M1		**Belt**	SWATHER 885-	**1**
	1057017M1		**Belt**	SWATHER 885-	**1**
	1071847M1		**Belt**	SWATHER 885-	**1**
	1076753M1		**Belt**	8570	**1**
	1416604R1		**Belt**		**1**
	1445437M1		**Belt**	206 206 OLD	**1**
	1446201M1		**Belt**	520 / 525 / 620 / 625	**1**
	1480826M1		**Belt**	3640	**1**
	1483277M1		**Belt**	3640	**1**
	1483880M1		**Belt**	3640	**1**
	1483881M1		**Belt**	3640	**1**
	1483882M1		**Belt**	3640	**1**
	1483884M1		**Belt**	3640	**1**
	1594240W1		**Belt**	8560 8570 8590 9720	**1**
	1603701M1		**Belt**	307	**1**
	1604055M1		**Belt**	206 206 OLD 240 307 307 OLD 440	**1**
	1604401M1		**Belt**	240 307 440	**1**
	1604524M1		**Belt**	520 / 525 / 620 / 625	**1**
	161433M1		**Belt**		**1**
	1614372M1		**Belt**	850 / 855	**1**
	1615254M1		**Belt**	400 400 / 500 OLD 410 / 415 410 / 415 / 510 /	**1**
	1615333M1		**Belt**	400 410 / 415 410 / 415 / 510 / 515 OLD 510 /	**1**
	1615715M1		**Belt**	520 / 525 / 620 / 625 OLD	**1**
	1616345M1		**Belt**		**1**
	1616447M1		**Belt**	530 / 535	**1**
	1616477M1		**Belt**	520 / 525 / 620 / 625	**1**
	1616714M1		**Belt**	520 / 525 / 620 / 625 520 / 525 / 620 / 625 OL	**1**
	1616715M1		**Belt**	520 / 525 / 620 / 625 530 / 535	**1**
	1628951M1		**Belt**		**1**
	1669570W1		**Belt**	8560	**1**

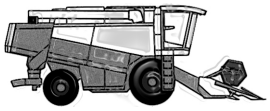

MASSEY FERGUSON

Pos.	Codice Originale	Codice RIMA	Descrizione Description	Applicazione Application	Conf. Pack.
	1686614M1		**Belt**		**1**
	1686614M91		**Belt**		**1**
	1686615M91		**Belt**		**1**
	1686616M91		**Belt**		**1**
	1687531M1		**Belt**	530S / 560 / 565 / 660 / 665 760 / 765	**1**
	1687609M1		**Belt**		**1**
	1687610M91		**Belt**		**1**
	1690693M1		**Belt**		**1**
	1690694M1		**Belt**		**1**
	1691764M1		**Belt**		**1**
	1720205M3		**Belt**	507 OLD	**1**
	1720255M1		**Belt**	307 440 487 / 506 / 507 487 OLD 506 OLD	**1**
	1720488M1		**Belt**	487 OLD	**1**
	1720647M1		**Belt**	307 OLD	**1**
	1720674M1		**Belt**	307 487 / 506 / 507 506 OLD	**1**
	1720674M2		**Belt**	487 OLD 507 OLD	**1**
	1721710M1		**Belt**	187 206	**1**
	1722835M1		**Belt**	186 (F) 187 206 206 OLD 240 307 307 OLD 4	**1**
	1722836M1		**Belt**		**1**
	1724154M1		**Belt**	186 (F) 186 OLD 187 206 206 OLD 240 307 3	**1**
	1730781M1		**Belt**		**1**
	1730782M1		**Belt**		**1**
	1731015M1		**Belt**		**1**
	1764410W1		**Belt**	8560 8570	**1**
	178128W1		**Belt**	8560	**1**
	1851749M1		**Belt**		**1**
	1855008M1		**Belt**	400 400 / 500 OLD 410 / 415 410 / 415 / 510 /	**1**
	195671M1		**Belt**	550 850 / 855 860 / 865	**1**
	205609M1		**Belt**		**1**
	210627M1		**Belt**	890 / 890S / 892 OLD	**1**
	211666M1		**Belt**	890 / 890S / 892 OLD	**1**
	216897M1		**Belt**	750 / 755 750 OLD	**1**
	222882M2		**Belt**	750 / 755 750 OLD 760 / 765 760 OLD	**1**
	226848M1		**Belt**		**1**
	226981M1		**Belt**	400 400 / 500 OLD 410 / 415 410 / 415 / 510 /	**1**
	227455M1		**Belt**	850 / 855 8560 8570 860 / 865	**1**
	227457M1		**Belt**	550	**1**
	227813M1		**Belt**	3640	**1**
	227976M1		**Belt**	550	**1**
	227984M1		**Belt**	300 550	**1**
	227986M1		**Belt**	400 / 500 OLD	**1**

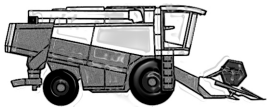

MASSEY FERGUSON

Pos.	Codice Originale	Codice RIMA	Descrizione Description	Applicazione Application	Conf. Pack.
	227986M2		**Belt**	550	**1**
	228113M1		**Belt**	500	**1**
	228147M91		**Belt**	300	**1**
	228722M1		**Belt**	400 / 500 OLD 410 / 415 / 510 / 515 OLD	**1**
	228813M1		**Belt**	400 400 / 500 OLD 410 / 415 410 / 415 / 510 /	**1**
	228813M3		**Belt**	550	**1**
	228999M1		**Belt**	400 / 500 OLD 500	**1**
	229863M1		**Belt**	890 / 890S / 892 OLD	**1**
	230097M2		**Belt**		**1**
	230350M1		**Belt**	400 / 500 OLD 410 / 415 / 510 / 515 OLD	**1**
	230356M1		**Belt**		**1**
	230380M1		**Belt**	540	**1**
	230381M1		**Belt**	300 500 510 / 515	**1**
	230556M4		**Belt**	550	**1**
	232511M2		**Belt**	530S / 560 / 565 / 660 / 665	**1**
	233124M1		**Belt**		**1**
	233950M1		**Belt**	400 / 500 OLD 410 / 415 / 510 / 515 OLD	**1**
	236670M1		**Belt**	300	**1**
	236958M1		**Belt**	300	**1**
	236959M1		**Belt**	300	**1**
	240447M1		**Belt**		**1**
	240575M2		**Belt**	540	**1**
	2439720W1		**Belt**	8590 9720	**1**
	2445370W1		**Belt**	8590 9720	**1**
	244952M1		**Belt**		**1**
	2492070W1		**Belt**	8590 9720	**1**
	2492110W1		**Belt**		**1**
	2523670W1		**Belt**	8590 9720	**1**
	2543960W1		**Belt**	8590 9720	**1**
	2543970W1		**Belt**	8590 9720	**1**
	2553480W1		**Belt**	8590 9720	**1**
	259047M91		**Belt**	750 / 755 750 OLD 760 / 765 860 / 865	**1**
	2593000W1		**Belt**	8560 8570	**1**
	2612330W1		**Belt**	8560 8570	**1**
	2614A158		**Belt**	520 / 525 / 620 / 625	**1**
	2614B156		**Belt**	530 / 535 530S / 560 / 565 / 660 / 665	**1**
	2621170W1		**Belt**	8560 8570	**1**
	2624080W1		**Belt**	8570	**1**
	2624390W1		**Belt**	8570	**1**
	2634420W1		**Belt**	8560	**1**
	265522M91		**Belt**	750 / 755 850 / 855	**1**

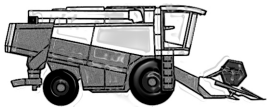

MASSEY FERGUSON

Pos.	Codice Originale	Codice RIMA	Descrizione Description	Applicazione Application	Conf. Pack.
	2674B152		**Belt**	520 / 525 / 620 / 625	**1**
	268847M91		**Belt**	550	**1**
	273757M91		**Belt**	750 / 755 760 / 765 850 / 855 860 / 865	**1**
	273837M91		**Belt**	750 OLD	**1**
	274015M91		**Belt**	750 / 755 760 / 765	**1**
	274252M91		**Belt**		**1**
	274339M91		**Belt**		**1**
	281560M1		**Belt**	850 / 855 860 / 865	**1**
	2833904M1		**Belt**		**1**
	2833904M3		**Belt**	3640	**1**
	2834466M1		**Belt**	3640	**1**
	284633M91		**Belt**	860 / 865	**1**
	3034474M1		**Belt**		**1**
	3035568M2		**Belt**		**1**
	3043153M1		**Belt**	530S / 560 / 565 / 660 / 665	**1**
	3043154M1		**Belt**	530S / 560 / 565 / 660 / 665	**1**
	3049010M91		**Belt**		**1**
	3049776M1		**Belt**		**1**
	3098153M1		**Belt**	3640	**1**
	3098211M2		**Belt**	3640	**1**
	3098212M1		**Belt**	3640	**1**
	3099829M1		**Belt**	3640	**1**
	3145238M1		**Belt**	3640	**1**
	3175109M1		**Belt**	3640	**1**
	3175160M1		**Belt**	3640	**1**
	3175529M1		**Belt**	3640	**1**
	320496M3		**Belt**	630 / 630S OLD	**1**
	320551M1		**Belt**	630 / 630S OLD	**1**
	320593M2		**Belt**	400 400 / 500 OLD 500 630 / 630S OLD	**1**
	320595M2		**Belt**	630 / 630S OLD	**1**
	320596M1		**Belt**	630 / 630S OLD	**1**
	320623M2		**Belt**	630 / 630S OLD	**1**
	321034M3		**Belt**	630 / 630S OLD	**1**
	3226971M1		**Belt**	3640	**1**
	3226972M1		**Belt**	3640	**1**
	322768M1		**Belt**	630 / 630S OLD	**1**
	324872M1		**Belt**	630 / 630S OLD	**1**
	326586M3		**Belt**	630 / 630S OLD	**1**
	328656M1		**Belt**	685 / 685S OLD 86 / 87 OLD	**1**
	328681M1		**Belt**	685 / 685S OLD	**1**
	3315896M1		**Belt**	3640	**1**

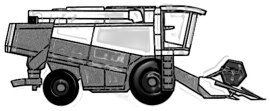

MASSEY FERGUSON

Pos.	Codice Originale	Codice RIMA	Descrizione Description	Applicazione Application	Conf. Pack.
	3315897M1		**Belt**	3640	**1**
	3316647M1		**Belt**	3640	**1**
	3319791M1		**Belt**	3640	**1**
	3370141M1		**Belt**	530 / 535 530S / 560 / 565 / 660 / 665	**1**
	3381364M91		**Belt**		**1**
	3383044M91		**Belt**		**1**
	3386190M91		**Belt**		**1**
	3386214M1		**Belt**	850 / 855	**1**
	3389525M1		**Belt**		**1**
	3581635M1		**Belt**		**1**
	3582951M1		**Belt**		**1**
	3582952M1		**Belt**		**1**
	3619356M91		**Belt**		**1**
	3712531M1		**Belt**		**1**
	3712532M1		**Belt**		**1**
	3714894M1		**Belt**		**1**
	3777681M91		**Belt**		**1**
	3777748M2		**Belt**		**1**
	3778975M2		**Belt**		**1**
	3780061M91		**Belt**		**1**
	3780138M91		**Belt**		**1**
	3780603M91		**Belt**		**1**
	3780604M91		**Belt**		**1**
	3780605M91		**Belt**		**1**
	3780606M91		**Belt**		**1**
	3780607M91		**Belt**		**1**
	3780608M91		**Belt**		**1**
	3780616M91		**Belt**		**1**
	401109M1		**Belt**	186 OLD 685 / 685S OLD 86 / 87 OLD	**1**
	401110M1		**Belt**	685 / 685S OLD 86 (F) 86 / 87 OLD 87 (F)	**1**
	401753M2		**Belt**	685 / 685S OLD	**1**
	402177M1		**Belt**	685 / 685S OLD 86 (F) 86 / 87 OLD 87 (F)	**1**
	402188M1		**Belt**	630 / 630S OLD 685 / 685S OLD	**1**
	402354M1		**Belt**	685 / 685S OLD	**1**
	402603M1		**Belt**	685 / 685S OLD 86 (F) 86 / 87 OLD 87 (F)	**1**
	402604M1		**Belt**	31 OLD 685 / 685S OLD 86 (F) 86 / 87 OLD	**1**
	402605M1		**Belt**	685 / 685S OLD 86 (F) 86 / 87 OLD 87 (F)	**1**
	402606M1		**Belt**	685 / 685S OLD	**1**
	402607M1		**Belt**	186 (F) 186 OLD 187 206 206 OLD 240 307 3	**1**
	402608M3		**Belt**	685 / 685S OLD 86 (F) 86 / 87 OLD 87 (F)	**1**
	403041M1		**Belt**	685 / 685S OLD 86 / 87 OLD	**1**

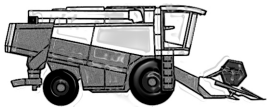

MASSEY FERGUSON

Pos.	Codice Originale	Codice RIMA	Descrizione Description	Applicazione Application	Conf. Pack.
	405928M1		**Belt**	31 OLD	**1**
	410195M1		**Belt**	630 / 630S OLD	**1**
	410617M1		**Belt**	31 OLD	**1**
	410647M1		**Belt**	31 OLD	**1**
	410919M1		**Belt**	31 OLD	**1**
	410957M1		**Belt**	31 OLD	**1**
	410958M1		**Belt**	31 OLD	**1**
	410959M1		**Belt**	240 307 31 OLD 440 487 / 506 / 507 506 OLD	**1**
	411020M1		**Belt**	31 OLD	**1**
	411125M1		**Belt**	31 OLD	**1**
	411218M1		**Belt**	31 OLD	**1**
	412074M1		**Belt**	86 (F) 86 / 87 OLD 87 (F)	**1**
	412236M1		**Belt**	86 (F) 86 / 87 OLD 87 (F)	**1**
	412237M1		**Belt**	86 (F) 86 / 87 OLD 87 (F)	**1**
	412333M1		**Belt**	86 (F) 86 / 87 OLD	**1**
	412343M2		**Belt**		**1**
	412399M1		**Belt**	86 (F) 86 / 87 OLD 87 (F)	**1**
	413122M2		**Belt**	86 (F)	**1**
	417441M1		**Belt**	186 OLD	**1**
	417468M1		**Belt**	186 OLD 187 87 (F)	**1**
	417660M1		**Belt**	186 OLD	**1**
	417795M1		**Belt**	186 OLD	**1**
	417797M1		**Belt**	186 OLD 487 OLD	**1**
	417972M1		**Belt**	186 (F) 186 OLD 187 206 206 OLD 240 307 3	**1**
	417974M1		**Belt**	186 (F) 186 OLD 187	**1**
	417995M1		**Belt**	186 OLD	**1**
	418192M1		**Belt**	3640	**1**
	418209M1		**Belt**	186 (F) 186 OLD 187 206 240 307 487 / 506 /	**1**
	418232M1		**Belt**	186 (F) 186 OLD 187 206 206 OLD 240 307 O	**1**
	418900M1		**Belt**	186 (F) 186 OLD 187 206 206 OLD	**1**
	487802M2		**Belt**	3640	**1**
	5015483M1		**Belt**		**1**
	5016260M1		**Belt**		**1**
	521404M1		**Belt**	760 OLD	**1**
	525906M1		**Belt**		**1**
	529964M1		**Belt**	850 / 855 860 / 865	**1**
	531603M1		**Belt**	8570	**1**
	532779M92		**Belt**	540 550	**1**
	545000M1		**Belt**		**1**
	557784M1		**Belt**		**1**
	561800M1		**Belt**		**1**

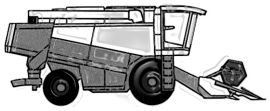

MASSEY FERGUSON

Pos.	Codice Originale	Codice RIMA	Descrizione Description	Applicazione Application	Conf. Pack.
	603719M1		**Belt**	400 410 / 415 500 510 / 515	**1**
	604735M1		**Belt**		**1**
	610097M1		**Belt**	890 / 890S / 892 OLD	**1**
	610119M1		**Belt**	890 / 890S / 892 OLD	**1**
	610470M1		**Belt**	890 / 890S / 892 OLD	**1**
	610506M1		**Belt**	890 / 890S / 892 OLD	**1**
	610813M1		**Belt**	890 / 890S / 892 OLD	**1**
	610841M1		**Belt**	890 / 890S / 892 OLD	**1**
	610842M1		**Belt**	890 / 890S / 892 OLD	**1**
	610846M1		**Belt**	890 / 890S / 892 OLD	**1**
	611353M1		**Belt**	890 / 890S / 892 OLD	**1**
	611588M1		**Belt**	890 / 890S / 892 OLD	**1**
	612258M1		**Belt**	440	**1**
	612563M1		**Belt**	890 / 890S / 892 OLD	**1**
	612938M1		**Belt**	890 / 890S / 892 OLD	**1**
	619317M2		**Belt**	520 / 525 / 620 / 625 520 / 525 / 620 / 625 OL	**1**
	619327M1		**Belt**		**1**
	619595M1		**Belt**		**1**
	621231M2		**Belt**	487 / 506 / 507	**1**
	621258M1		**Belt**	186 (F) 187 206 206 OLD 240 307 307 OLD 4	**1**
	621259M1		**Belt**	186 (F) 186 OLD 187 487 OLD	**1**
	621261M1		**Belt**	186 (F) 187 206 206 OLD 240 307 307 OLD 4	**1**
	621262M1		**Belt**	186 (F) 187 206 206 OLD 240 307 307 OLD 4	**1**
	621320M2		**Belt**	487 / 506 / 507 487 OLD 506 OLD	**1**
	621321M2		**Belt**	487 OLD 506 OLD	**1**
	621588M1		**Belt**	440 487 / 506 / 507 506 OLD 507 OLD	**1**
	621646M1		**Belt**	187 206 206 OLD 240 307 307 OLD 440 487 /	**1**
	624390W1		**Belt**	8560	**1**
	629212M1		**Belt**		**1**
	782523M1		**Belt**		**1**
	782835M1		**Belt**	520 / 525 / 620 / 625 520 / 525 / 620 / 625 OL	**1**
	782849M2		**Belt**	520 / 525 / 620 / 625 520 / 525 / 620 / 625 OL	**1**
	782850M2		**Belt**	520 / 525 / 620 / 625 OLD	**1**
	783539M1		**Belt**	520 / 525 / 620 / 625 520 / 525 / 620 / 625 OL	**1**
	783907M2		**Belt**	520 / 525 / 620 / 625 OLD	**1**
	784170M2		**Belt**	520 / 525 / 620 / 625 520 / 525 / 620 / 625 OL	**1**
	784796M1		**Belt**	400 / 500 OLD 410 / 415 / 510 / 515 OLD	**1**
	784796M2		**Belt**	400 410 / 415 500 510 / 515 520 / 525 / 620 / 6	**1**
	784797M1		**Belt**	400 / 500 OLD 410 / 415 / 510 / 515 OLD	**1**
	784797M2		**Belt**	400 410 / 415 500 510 / 515 520 / 525 / 620 / 6	**1**
	785585M1		**Belt**	400	**1**

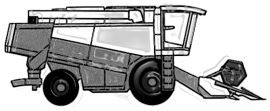

MASSEY FERGUSON

Pos.	Codice Originale	Codice RIMA	Descrizione Description	Applicazione Application	Conf. Pack.
	785585M3		**Belt**	410 / 415 410 / 415 / 510 / 515 OLD 510 / 515	**1**
	785676M2		**Belt**	410 / 415 410 / 415 / 510 / 515 OLD	**1**
	785806M1		**Belt**	400 / 500 OLD 410 / 415 / 510 / 515 OLD	**1**
	785806M2		**Belt**	400	**1**
	785810M1		**Belt**	400 400 / 500 OLD 520 / 525 / 620 / 625 520 /	**1**
	788317M1		**Belt**		**1**
	789217M1		**Belt**		**1**
	789853M1		**Belt**	400 520 / 525 / 620 / 625 520 / 525 / 620 / 625	**1**
	789907M1		**Belt**		**1**
	789930M1		**Belt**	520 / 525 / 620 / 625 520 / 525 / 620 / 625 OL	**1**
	789931M1		**Belt**	520 / 525 / 620 / 625 OLD 530S / 560 / 565 / 6	**1**
	789967M1		**Belt**	520 / 525 / 620 / 625 520 / 525 / 620 / 625 OL	**1**
	789976M1		**Belt**	530 / 535	**1**
	790833M1		**Belt**	400 / 500 OLD 410 / 415 / 510 / 515 OLD 500	**1**
	790839M1		**Belt**	400 400 / 500 OLD 410 / 415 / 510 / 515 OLD	**1**
	793861M1		**Belt**	400 400 / 500 OLD 410 / 415	**1**
	793862M1		**Belt**	410 / 415 / 510 / 515 OLD 500 510 / 515	**1**
	793863M1		**Belt**	400 400 / 500 OLD 410 / 415 410 / 415 / 510 /	**1**
	794128M1		**Belt**		**1**
	794129M1		**Belt**		**1**
	795514M4		**Belt**	400 410 / 415 410 / 415 / 510 / 515 OLD 510 /	**1**
	795582M1		**Belt**	410 / 415 / 510 / 515 OLD	**1**
	795582M2		**Belt**	410 / 415 510 / 515 520 / 525 / 620 / 625 520 /	**1**
	832085M1		**Belt**	540 760 / 765	**1**
	832490M1		**Belt**	400 400 / 500 OLD 410 / 415 410 / 415 / 510 /	**1**
	832538M1		**Belt**	400 400 / 500 OLD 500	**1**
	832806M1		**Belt**		**1**
	832822M1		**Belt**	300	**1**
	832855M1		**Belt**	300	**1**
	832866M2		**Belt**	300 750 / 755 750 OLD 760 / 765 760 OLD	**1**
	832869M1		**Belt**	300	**1**
	832870M1		**Belt**	300	**1**
	832872M1		**Belt**	300	**1**
	832873M1		**Belt**	300 540	**1**
	832876M1		**Belt**	300	**1**
	832877M1		**Belt**	300 540	**1**
	832878M1		**Belt**	300 540	**1**
	832895M2		**Belt**	300	**1**
	832896M1		**Belt**	300	**1**
	832965M1		**Belt**	300	**1**
	833768M1		**Belt**	300 540 550 750 / 755 750 OLD 760 / 765 760	**1**

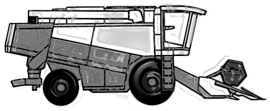

MASSEY FERGUSON

Pos.	Codice Originale	Codice RIMA	Descrizione Description	Applicazione Application	Conf. Pack.
	833854M1		**Belt**	760 / 765	**1**
	833854M2		**Belt**	750 / 755 750 OLD 760 OLD 850 / 855 860 / 8	**1**
	833855M1		**Belt**	750 / 755 750 OLD	**1**
	833856M1		**Belt**	750 / 755 750 OLD	**1**
	833857M1		**Belt**	750 OLD	**1**
	833857M3		**Belt**		**1**
	833858M4		**Belt**	750 / 755 760 / 765 760 OLD 850 / 855 860 / 8	**1**
	833859M4		**Belt**	750 OLD 850 / 855	**1**
	833860M1		**Belt**	760 / 765 760 OLD	**1**
	833862M3		**Belt**	760 / 765 760 OLD 860 / 865	**1**
	833863M1		**Belt**	750 / 755 760 / 765 850 / 855 860 / 865	**1**
	833863M3		**Belt**	750 OLD 760 OLD	**1**
	833865M1		**Belt**	760 / 765 760 OLD 860 / 865	**1**
	833866M1		**Belt**	750 / 755 760 / 765 760 OLD 850 / 855 860 / 8	**1**
	833867M1		**Belt**	760 / 765 760 OLD 860 / 865	**1**
	833868M2		**Belt**	750 OLD 760 / 765 760 OLD 860 / 865	**1**
	833869M1		**Belt**	760 / 765 760 OLD	**1**
	833870M1		**Belt**	760 / 765 760 OLD	**1**
	833871M1		**Belt**	750 / 755 750 OLD 760 / 765 760 OLD	**1**
	833872M1		**Belt**	750 / 755 750 OLD 760 / 765 760 OLD	**1**
	833873M1		**Belt**	750 / 755 750 OLD 850 / 855	**1**
	833874M1		**Belt**	750 / 755 750 OLD 850 / 855	**1**
	833906M1		**Belt**		**1**
	833962M1		**Belt**	540 550 760 / 765 850 / 855 860 / 865	**1**
	834029M1		**Belt**		**1**
	834058M1		**Belt**	300 550 750 OLD 760 / 765 760 OLD	**1**
	834110M1		**Belt**	400 400 / 500 OLD 410 / 415 410 / 415 / 510 /	**1**
	834139M1		**Belt**	300 540 550 750 / 755 750 OLD 760 / 765 760	**1**
	834140M1		**Belt**	300 540 550 750 / 755 750 OLD 760 / 765 760	**1**
	834174M1		**Belt**	400 400 / 500 OLD 410 / 415 410 / 415 / 510 /	**1**
	834175M1		**Belt**	550	**1**
	834176M1		**Belt**	550	**1**
	834190M1		**Belt**	300 540 550 750 / 755 760 / 765 760 OLD 850	**1**
	834254M1		**Belt**	550	**1**
	834332M1		**Belt**	540 550	**1**
	834492M2		**Belt**	300 550 750 / 755 750 OLD 760 OLD	**1**
	842110M1		**Belt**	750 / 755 750 OLD 760 / 765 760 OLD 850 / 8	**1**
	842383M1		**Belt**	750 OLD	**1**
	842413M1		**Belt**	750 / 755 750 OLD 760 / 765 760 OLD 850 / 8	**1**
	842417M1		**Belt**	760 OLD	**1**
	842419M1		**Belt**	750 OLD 760 OLD	**1**

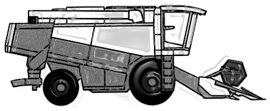

MASSEY FERGUSON

Pos.	Codice Originale	Codice RIMA	Descrizione Description	Applicazione Application	Conf. Pack.
	842423M1		**Belt**	750 / 755 750 OLD 760 / 765 760 OLD 850 / 8	**1**
	842463M1		**Belt**	760 / 765 760 OLD	**1**
	842464M2		**Belt**	760 / 765 760 OLD	**1**
	842796M1		**Belt**	760 OLD	**1**
	842809M1		**Belt**	750 / 755 750 OLD 760 / 765 760 OLD 860 / 8	**1**
	842845M1		**Belt**	750 / 755 750 OLD 760 / 765 760 OLD 850 / 8	**1**
	842851M1		**Belt**	750 OLD 760 OLD	**1**
	842935M1		**Belt**	550	**1**
	843008M1		**Belt**	750 OLD 760 OLD	**1**
	843041M1		**Belt**		**1**
	843045M1		**Belt**	540 750 / 755 750 OLD 760 / 765 760 OLD	**1**
	843302M1		**Belt**	760 OLD 860 / 865	**1**
	843310M1		**Belt**	750 / 755 750 OLD 850 / 855	**1**
	843313M1		**Belt**	530 / 535 530S / 560 / 565 / 660 / 665	**1**
	843324M1		**Belt**	750 OLD 760 OLD	**1**
	843332M2		**Belt**		**1**
	843732M2		**Belt**	540	**1**
	843737M1		**Belt**	550	**1**
	843742M1		**Belt**	540	**1**
	843747M1		**Belt**	540 750 / 755 760 / 765 850 / 855 860 / 865	**1**
	843758M1		**Belt**	540	**1**
	843759M1		**Belt**	540	**1**
	843760M1		**Belt**	540 750 / 755 760 / 765 850 / 855 860 / 865	**1**
	843948M1		**Belt**	750 / 755 760 / 765 850 / 855 860 / 865	**1**
	844079M1		**Belt**	750 / 755 760 / 765 850 / 855 860 / 865	**1**
	844091M1		**Belt**	540	**1**
	844171M1		**Belt**	540	**1**
	890982M1		**Belt**		**1**
	893575M1		**Belt**	186 OLD 400 410 / 415 500 510 / 515 520 / 52	**1**
	903555M1		**Belt**		**1**
	903594M1		**Belt**		**1**
	905447M1		**Belt**	487 / 506 / 507 507 OLD	**1**
	905481M1		**Belt**	487 / 506 / 507 507 OLD	**1**
	905920M1		**Belt**	186 (F) 187 206 206 OLD 240 307 307 OLD 4	**1**
	905921M1		**Belt**	186 (F) 187 206 206 OLD 240 307 307 OLD 4	**1**
	905980M1		**Belt**	487 / 506 / 507 506 OLD 507 OLD	**1**
	905981M1		**Belt**	507 OLD	**1**
	905981M2		**Belt**	487 / 506 / 507	**1**
	905982M1		**Belt**	487 / 506 / 507 507 OLD	**1**
	912717M1		**Belt**		**1**
	912877M1		**Belt**		**1**

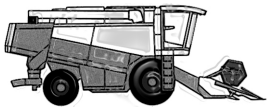

MASSEY FERGUSON

Pos.	Codice Originale	Codice RIMA	Descrizione Description	Applicazione Application	Conf. Pack.
	916833M1		**Belt**	240 307 307 OLD 440	**1**
	923802M1		**Belt**		**1**
	923971M1		**Belt**		**1**
	924698M2		**Belt**		**1**
	925216M1		**Belt**		**1**
	926781M1		**Belt**		**1**
	9514311		**Belt**		**1**
	9811830W2		**Belt**	8560 8570	**1**
	D41904200		**Belt**		**1**
	D41909000		**Belt**	D 8400 / D 8700 D 8900 D 9000 MF 30 / MF	**1**
	D41911000		**Belt**	D 7000 / D 7000S D 7200 D 7500 D 8000 / D	**1**
	D41912300		**Belt**	24 D 4500 D 7200 D 7500 D 8500 MF 29 MF	**1**
	D41912400		**Belt**	27 29 31 D 1900 (F 28722) D 7000 / D 7000S	**1**
	D41926300		**Belt**	24 D 3000S D 3000S (F35994) D 3000S (F360	**1**
	D41927800		**Belt**	24 D 4500	**1**
	D41928100		**Belt**	24 D 1200 / D 1250 D 1500 / D 1800 D 1600 /	**1**
	D41929000		**Belt**	27 D 7000 / D 7000S D 7200 D 7500 D 8000 /	**1**
	D41929100		**Belt**	27 29 31 D 1900 (F 28722) D 7000 / D 7000S	**1**
	D41929500		**Belt**	24 D 3000S D 3000S (F35994) D 3000S (F360	**1**
	D41930200		**Belt**	29 31 D 7000 / D 7000S D 7200 D 7500 D 800	**1**
	D41930300		**Belt**	24 D 1200 / D 1250 D 1600 / D 1650 D 3000S	**1**
	D41933700		**Belt**	D 8900 D 9000 MF 34 MF 38	**1**
	D41934200		**Belt**	D 9000 MF 38	**1**
	D41934600		**Belt**	D 8900 MF 34	**1**
	D41934800		**Belt**	27 29 31 D 7200 D 7500 D 8400 / D 8700 D 8	**1**
	D41935300		**Belt**	D 3000S D 3000S (T36005) D 4000 / D 4000S	**1**
	D41935500		**Belt**	24 D 4500	**1**
	D41935700		**Belt**	24 D 1200 / D 1250 D 1600 / D 1650 D 4500	**1**
	D41936200		**Belt**	27 29 31 D 7000 / D 7000S D 7200 D 7500 D	**1**
	D41936700		**Belt**	D 8400 / D 8700 MF 30 / MF 32	**1**
	D41936800		**Belt**		**1**
	D41937500		**Belt**	D 8900 D 9000 MF 34 MF 38	**1**
	D41937800		**Belt**		**1**
	D41942100		**Belt**	27 29 31 D 1900 (F 28722) D 1900 (T 27978)	**1**
	D41942200		**Belt**	D 8400 / D 8700 MF 30 / MF 32	**1**
	D41943600		**Belt**		**1**
	D41950100		**Belt**	D 2250 D 8400 / D 8700 MF 30 / MF 32	**1**
	D41950400		**Belt**	D 1900 (T 27978) D 8400 / D 8700 MF 30 / M	**1**
	D41955900		**Belt**	24 D 3000S D 3000S (F35994) D 3000S (F360	**1**
	D41958500		**Belt**	24 D 4000 / D 4000S (F35057-T35832) D 400	**1**
	D41963900		**Belt**	D 7200 D 7500 D 8500 D 8900 MF 29 MF 31	**1**

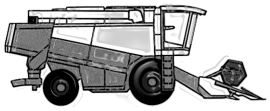

MASSEY FERGUSON

Pos.	Codice Originale	Codice RIMA	Descrizione Description	Applicazione Application	Conf. Pack.
	D41964300		**Belt**	24 27 29 31 D 1900 (F 28722) D 1900 (T 2797	**1**
	D41972100		**Belt**	24 D 4500	**1**
	D41972800		**Belt**	24 D 4000 / D 4000S (F35057-T35832) D 400	**1**
	D41973400		**Belt**	29 31	**1**
	D41978300		**Belt**		**1**
	D41978400		**Belt**	D 8400 / D 8700 MF 30 / MF 32	**1**
	D41978500		**Belt**	24 D 4000 / D 4000S (F35057-T35832) D 400	**1**
	D41978800		**Belt**	D 8900 D 9000 MF 34 MF 38	**1**
	D41978900		**Belt**	D 8900 D 9000 MF 34 MF 38	**1**
	D41979000		**Belt**	D 8900 D 9000 MF 34 MF 38	**1**
	D41979100		**Belt**	D 8900 D 9000 MF 34 MF 38	**1**
	D41979200		**Belt**	D 9000 MF 38	**1**
	D41979400		**Belt**	D 8900 D 9000 MF 34 MF 38	**1**
	D41979600		**Belt**	D 8400 / D 8700 D 8900 D 9000 MF 30 / MF	**1**
	D41979800		**Belt**	D 8900 D 9000 MF 34 MF 38	**1**
	D41979900		**Belt**	D 9000 MF 38	**1**
	D41980400		**Belt**	27 29 31 D 7000 / D 7000S D 7200 D 8000 / D	**1**
	D41980800		**Belt**	24 D 4500	**1**
	D41980900		**Belt**	D 7500 D 8400 / D 8700 MF 29 MF 30 / MF 3	**1**
	D41981000		**Belt**	D 8900 D 9000 MF 34 MF 38	**1**
	D41981100		**Belt**	D 8900 D 9000 MF 34 MF 38	**1**
	D41981200		**Belt**	D 8900 D 9000 MF 34 MF 38	**1**
	D41982000		**Belt**		**1**
	D41982100		**Belt**	D 7200 D 7500 D 8400 / D 8700 D 8500 MF 2	**1**
	D41982300		**Belt**		**1**
	D41982400		**Belt**	27 29 31 D 1900 (F 28722) D 1900 (T 27978)	**1**
	D41982600		**Belt**		**1**
	D41983500		**Belt**	27 29 31 D 1900 (F 28722) D 1900 (T 27978)	**1**
	D41983600		**Belt**	D 7200 D 7500 D 8000 / D 8000S D 8500 D 8	**1**
	D41984100		**Belt**	D 8400 / D 8700 MF 30 / MF 32	**1**
	D41985200		**Belt**	D 8900 D 9000 MF 34 MF 38	**1**
	D41985300		**Belt**	D 8900 D 9000 MF 34 MF 38	**1**
	D41985600		**Belt**	D 8400 / D 8700 D 9000 MF 30 / MF 32 MF 3	**1**
	D41986100		**Belt**	D 8900 D 9000 MF 34 MF 38	**1**
	D41986200		**Belt**	D 9000 MF 38	**1**
	D41986300		**Belt**	D 8400 / D 8700 D 9000 MF 30 / MF 32 MF 3	**1**
	D41987300		**Belt**	27 29 D 1900 (F 28722) D 1900 (T 27978) D 7	**1**
	D41987600		**Belt**	31 D 8000 / D 8000S MF 31	**1**
	D41987800		**Belt**	27 29 31 D 7200 D 7500 D 8500 MF 27 MF 29	**1**
	D41987900		**Belt**	27 29 31 D 7200 D 7500 D 8400 / D 8700 D 8	**1**
	D41988700		**Belt**	24 D 4500	**1**

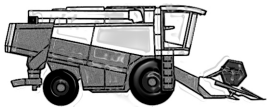

MASSEY FERGUSON

Pos.	Codice Originale	Codice RIMA	Descrizione Description	Applicazione Application	Conf. Pack.
	D41988900		**Belt**	24 D 4500	**1**
	D41989100		**Belt**	24 D 4500	**1**
	D41989200		**Belt**	27 29 31 D 7200 D 7500 D 8500 MF 27 MF 29	**1**
	D41989800		**Belt**	D 8900 MF 34	**1**
	D41990001		**Belt**	D 8900 D 9000 MF 34 MF 38	**1**
	D41990007		**Belt**		**1**
	D41990009		**Belt**	D 8400 / D 8700 MF 30 / MF 32	**1**
	D41990011		**Belt**		**1**
	D41990012		**Belt**		**1**
	D41990013		**Belt**		**1**
	D41990048		**Belt**		**1**
	D41990049		**Belt**		**1**
	D41990050		**Belt**	D 8400 / D 8700 MF 30 / MF 32	**1**
	D41990051		**Belt**	D 8400 / D 8700 MF 30 / MF 32	**1**
	D41990053		**Belt**		**1**
	D41990054		**Belt**		**1**
	D41990055		**Belt**		**1**
	D41990056		**Belt**		**1**
	D41990068		**Belt**	D 8400 / D 8700 MF 30 / MF 32	**1**
	D41990100		**Belt**	27 29 31 D 7000 / D 7000S D 7200 D 7500 D	**1**
	D41990200		**Belt**	27 29 31 D 7000 / D 7000S D 7200 D 7500 D	**1**
	D41990400		**Belt**	D 7200 D 7500 D 8500 MF 29 MF 31	**1**
	D41990700		**Belt**		**1**
	D41991000		**Belt**	D 8400 / D 8700 MF 30 / MF 32	**1**
	D41991100		**Belt**		**1**
	D41991200		**Belt**	D 8400 / D 8700 D 8900 D 9000 MF 30 / MF	**1**
	D41991300		**Belt**	D 8500 MF 31	**1**
	D41991400		**Belt**	D 4500	**1**
	D41991600		**Belt**	D 4500	**1**
	D41991700		**Belt**	27 29 31 D 7200 D 7500 D 8400 / D 8700 D 8	**1**
	D41992100		**Belt**	D 4000 / D 4000S (F35057-T35832) D 4000 /	**1**
	D41992200		**Belt**	D 4000 / D 4000S (F35057-T35832) D 4000 /	**1**
	D41993400		**Belt**	27 D 7000 / D 7000S D 7200 D 7500 D 8000 /	**1**
	D41994600		**Belt**	D 2250	**1**
	D41995100		**Belt**	D 2500	**1**
	D41995600		**Belt**	D 2500	**1**
	D41998800		**Belt**	D 8900 D 9000 MF 34 MF 38	**1**
	D42328100		**Belt**	27 29 31 D 7500 MF 27 MF 29 MF 31	**1**
	D42328200		**Belt**	27 29 31 MF 27 MF 29 MF 31 MF 34 MF 38	**1**
	D42328400		**Belt**	27 29 31 MF 27 MF 29 MF 30 / MF 32 MF 31	**1**

CASE – I.H.C.

Barra di Taglio - *Cutting Bar*

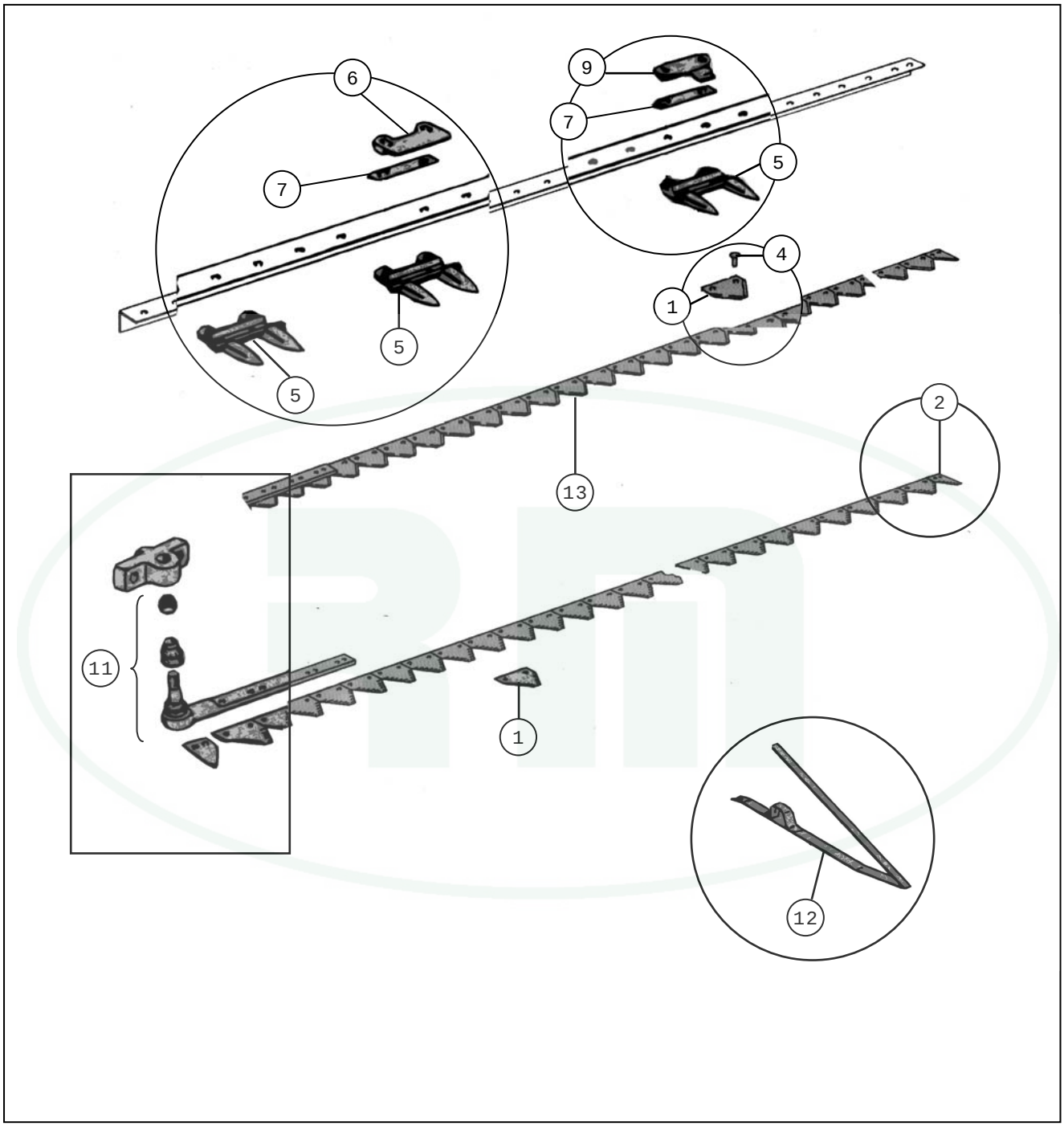

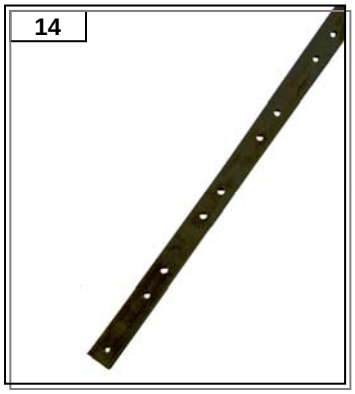

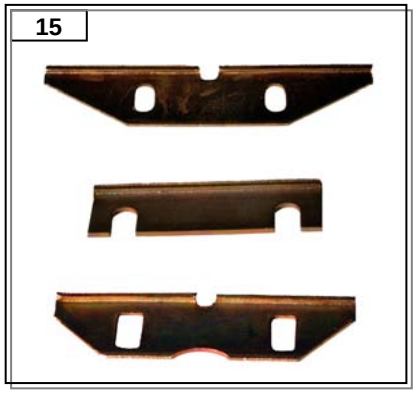

US = rigata sotto
TS = rigata sopra
TTQST = testa tonda quadro sotto t.
TT = testa tonda
TPSV = testa piana svasata

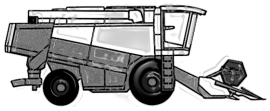

CASE I.H.C.

Pos.	Codice Originale	Codice RIMA	Descrizione Description	Applicazione Application	Conf. Pack.
			BARRA DI TAGLIO *Cutterbar*		
01		RM20-015	Knife section	I.H.C. Soia	25
	158200C1	RM50-222	Knife section	Barra 1010/1020 2,7 mm.	25
	3159699R1	RM20-051	Knife section	I.H.C. - 2,7 mm. M22831 321/431/531/541	25
	44100000	RM50-001	Knife section	Barra 1030 - 2,7 mm.	25
	44103700	RM50-002	Knife section	Barra 1030 - 2,7 mm.	25
	634793R2	RM20-044	Knife section	I.H.C. - 1482/914	25
	823711C1	RM20-050	Knife section	I.H.C. - 2,7 mm.	25
	826720C2	RM50-221	Knife section	Barra 1010/1020 2,7 mm.	25
	826722C1	RM20-017	Knife section	I.H.C. - 2,7 mm. = M.22831	25
02	1316030C1	RM50-220	Half section	Barra 1010/1020 - 2,7 mm.	1
	3163236R1	RM20-002	Half section	I.H.C.	1
	44103800	RM50-003	Half section	Barra 1030 - finale	1
	44104000	RM50-004	Half section	Barra 1030 - iniziale	1
	599733R1	RM20-019	Half section	I.H.C. - 2,7 mm. = 493198R1	1
04		RM20-045	Rivet	I.H.C.	2
	1954816C1	RM50-225	Nut	Barra 1010/1020	1
	1979166C1	RM50-223	Screw	Barra 1010/1020 12-24x1/18 inch	1
	2195	RM50-227	Rivet	Barra 1010/1020 5-1/2x1-18 inch	2
	40402400	RM50-080	Bolt	Barra 1030 - 6X16 - 41087400	100
	41306100	RM50-055	Rivet	Barra 1030 - 6X16	2
	41306200	RM50-096	Rivet	Barra 1030 - 6X28	2
	41377500	RM50-097	Rivet	Barra 1030 - 5,3x14/15/18/32	2
	700708646	RM50-224	Screw	Barra 1010/1020 12-24x5/8 inch	1
	991059R91	RM50-226	Rivet	Barra 1010/1020 6x5/8 inch	2
05	1307299C2	RM50-235	Double finger	Barra 1010/1020	1
	1326787C3	RM50-234	Double finger	Barra 1010/1020	1
	198955C1	RM20-014	Quadruple finger	I.H.C. - Soia 31-17-13400	1
	3159696R91	RM20-007	Double finger	I.H.C. - 321/431/531/541	1
	44104500	RM50-005	Double finger	Barra 1030 - 44102900	1
	44104600	RM50-007	Double finger	Barra 1030 - 28260535	1
	44104700	RM50-006	Double finger	Barra 1030 - 28260531	1
	633098R1	RM20-037	Double finger	I.H.C. - RM265 303/431/482/914	1
06	1307280C3	RM50-236	Knife clip	Barra 1010/1020	10
	28260362	RM50-013	Knife clip	Barra 1030	10
07	126628C1	RM50-239	Thick	Barra 1010/1020	1
	1316039C1	RM50-237	Thick	Barra 1010/1020	1
	1316040C1	RM50-240	Thick	Barra 1010/1020	1

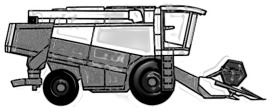

CASE I.H.C.

Pos.	Codice Originale	Codice RIMA	Descrizione Description	Applicazione Application	Conf. Pack.
07	28230120	RM50-014	Thick	Barra 1030	1
	379093A1	RM50-238	Thick	Barra 1010/1020	1
09		RM1402	Knife clip - RM knives	Barra 1030	10
	101001A2	RM20-016	Knife clip	I.H.C. = 1320746C3	10
	28200961	RM50-011	Knife clip	Barra 1030	10
	28283934	RM50-012	Knife clip	Barra 1030	10
	3155054R2	RM20-006	Knife clip	I.H.C. - 321/431/531/541	10
11	1313795C2	RM50-228	Knife head	Barra 1010/1020 1307301C91	1
	1313797C1	RM50-231	Block	Barra 1010/1020	1
	1345491C1	RM50-232	cover	Barra 1010/1020	1
	19612R91	RM50-233	Greaser	Barra 1010/1020	1
	28280147	RM50-010	Ball joint	Barra 1030	1
	28283011	RM50-008	Knife head	Barra 1030	1
	3166667R91	RM20-004	Ball joint	I.H.C. = 100144	1
	3166668R91	RM20-005	Ball joint	I.H.C.	1
	3166684R2	RM20-023	Knife head	I.H.C.	1
	425-1310	RM50-229	Nut	Barra 1010/1020	1
	432-824	RM50-230	Pin	Barra 1010/1020	1
	44120000	RM50-009	Knife head	Barra 1030	1
	540607R11	RM20-022	Knife head	I.H.C. - 197230C91	1
	824812C92	RM20-028	Knife head	I.H.C. - 134023 = 824594C91	1
	832710C1	RM20-027	Knife head	I.H.C.	1
12		RM20-043	Crop lifter	I.H.C. - Universale	1
		RM20-061	Holder	I.H.C. - Universale	1
	49040000	RM50-029	Crop lifter	Barra 1030	1
	49040200	RM50-030	Crop lifter	ASX120 - Barra 1030	1
	49040300	RM50-031	Crop lifter	SK220 - Barra 1030	1
	49040600	RM50-093	Holder	Barra 1030	1
13	101987C95	RM20-031	Complete knife	I.H.C.	1
	101988C95	RM20-032	Complete knife	I.H.C.	1
	1307281C96	RM50-241	Complete knife	Barra 1010/1020	1
	1307282C96	RM50-242	Complete knife	Barra 1010/1020	1
	1307283C96	RM50-243	Complete knife	Barra 1010/1020	1
	1307284C96	RM50-244	Complete knife	Barra 1010/1020 - 22'	1
	1307285C96	RM50-245	Complete knife	Barra 1010/1020	1
	1307286C96	RM50-246	Complete knife	Barra 1010/1020	1
	28201054	RM50-072	Complete knife	Barra 1030	1
	28230007	RM50-027	Complete knife	Barra 1030	1
	28230008	RM50-026	Complete knife	Barra 1030	1

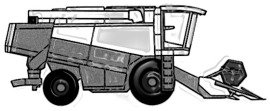

CASE I.H.C.

Pos.	Codice Originale	Codice RIMA	Descrizione Description	Applicazione Application	Conf. Pack.
13	28230040	RM50-074	Complete knife	Barra 1030	1
	28230753	RM50-073	Complete knife	Barra 1030	1
	28281492	RM50-028	Complete knife	Barra 1030	1
	28283009	RM50-019	Complete knife	Barra 1030	1
	28283010	RM50-020	Complete knife	Barra 1030	1
	28283306	RM50-016	Complete knife	Barra 1030	1
	28283307	RM50-017	Complete knife	Barra 1030	1
	28283308	RM50-018	Complete knife	Barra 1030	1
	28283865	RM50-021	Complete knife	Barra 1030	1
	28285042	RM50-071	Complete knife	Barra 1030	1
	3166690R91	RM20-008	Complete knife	I.H.C. - 810/825	1
	3166691R91	RM20-009	Complete knife	I.H.C. - 810/825	1
	3166692R91	RM20-010	Complete knife	I.H.C. - 810/825	1
	3166693R91	RM20-011	Complete knife	I.H.C. - 810/825	1
	540605R91	RM20-026	Complete knife	I.H.C.	1
	542816R91	RM20-025	Complete knife	I.H.C.	1
14		RM20-012	Knife back	I.H.C.	1
		RM20-013	Knife back	I.H.C.	1
		RM20-029	Knife back	I.H.C.	1
		RM20-030	Knife back	I.H.C.	1
		RM50-040	Knife back		1
		RM50-045	Knife back	Barra 1030 - 20x6x3700	1
		RM50-046	Knife back	Barra 1030 - 20x6x4300	1
		RM50-047	Knife back	Barra 1030 - 20x6x4950	1
		RM50-048	Knife back	Barra 1030 - 20x6x5550	1
		RM50-049	Knife back	Barra 1030 - 20x6x6150	1
		RM50-050	Knife back	Barra 1030 - 20x6x6700	1
		RM50-051	Knife back	Barra 1030 - 20x6x6150	1
		RM50-052	Knife back	Barra 1030 - 20x6x4950	1
		RM50-053	Knife back	Barra 1030 - 20x6x4300	1
	540604R41	RM20-057	Knife back	I.H.C.	1
	542815R91	RM20-056	Knife back	I.H.C.	1
15	MC.468	RM20-035	Wearing plate	I.H.C. 206196	1

CASE I.H.C.

Coclea - *Auger*

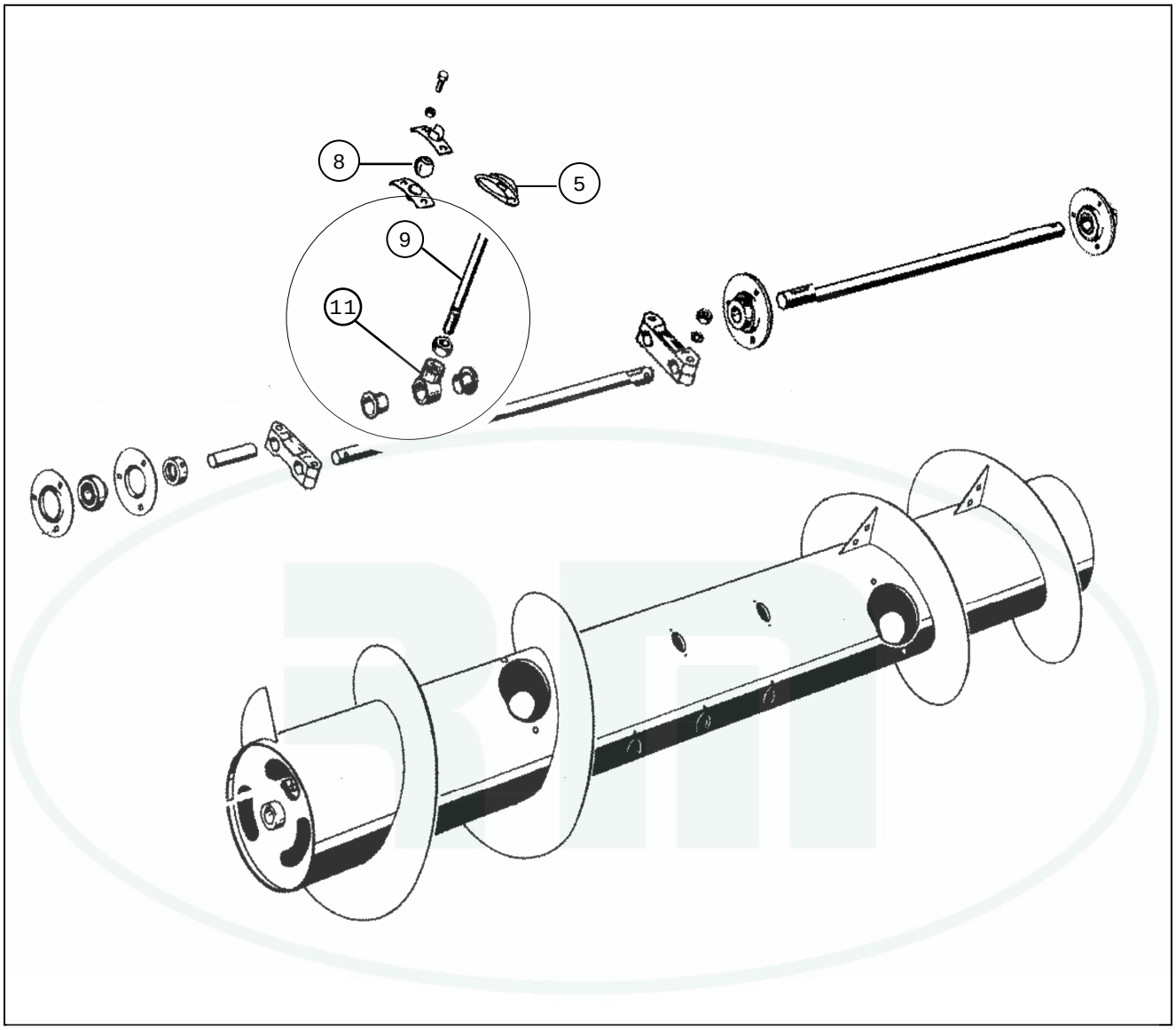

Aspo – *Reel Tines*

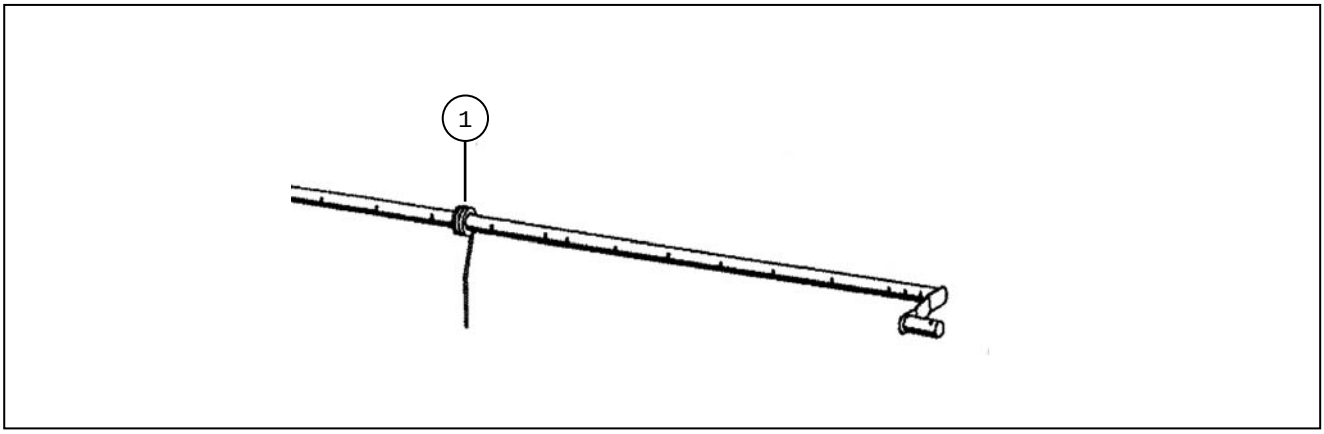

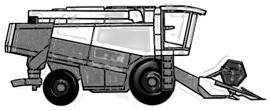

CASE I.H.C.

Pos.	Codice Originale	Codice RIMA	Descrizione Description	Applicazione Application	Conf. Pack.
			COCLEA *Auger*		
05	1307259C2	RM50-249	Finger guide	Barra 1010/1020	25
	28283060	RM50-039	Finger guide	Barra 1030	25
08	28260314	RM50-035	Guide ball	Barra 1030 - dito 16mm.	1
	43388400	RM50-036	Guide ball	Barra 1030 - dito 14mm.	1
09	28250566	RM50-033	Retractable finger	Barra 1030 - 14x245	10
	28283815	RM50-034	Retractable finger	Barra 1030 - 16x245	10
	434295A2	RM50-248	Retractable finger	Barra 1010/1020 1320699C1	10
11	1308425C1	RM50-247	T bushing	Barra 1010/1020	10
	28250585	RM50-037	T bushing	Barra 1030 - diam. 14	10
	28251831	RM50-038	T bushing	Barra 1030 - diam. 16	10
			ASPO *Reel Tines*		
01	28350208	RM50-066	Reel tine	Barra - 1030	20
	28350257	RM50-065	Reel tine	Barra - 1030	20
	28680130	RM50-063	Reel tine	Barra - 1030	20
	28680131	RM50-064	Reel tine	Barra - 1030	20

Battitore – *Treshing Device*

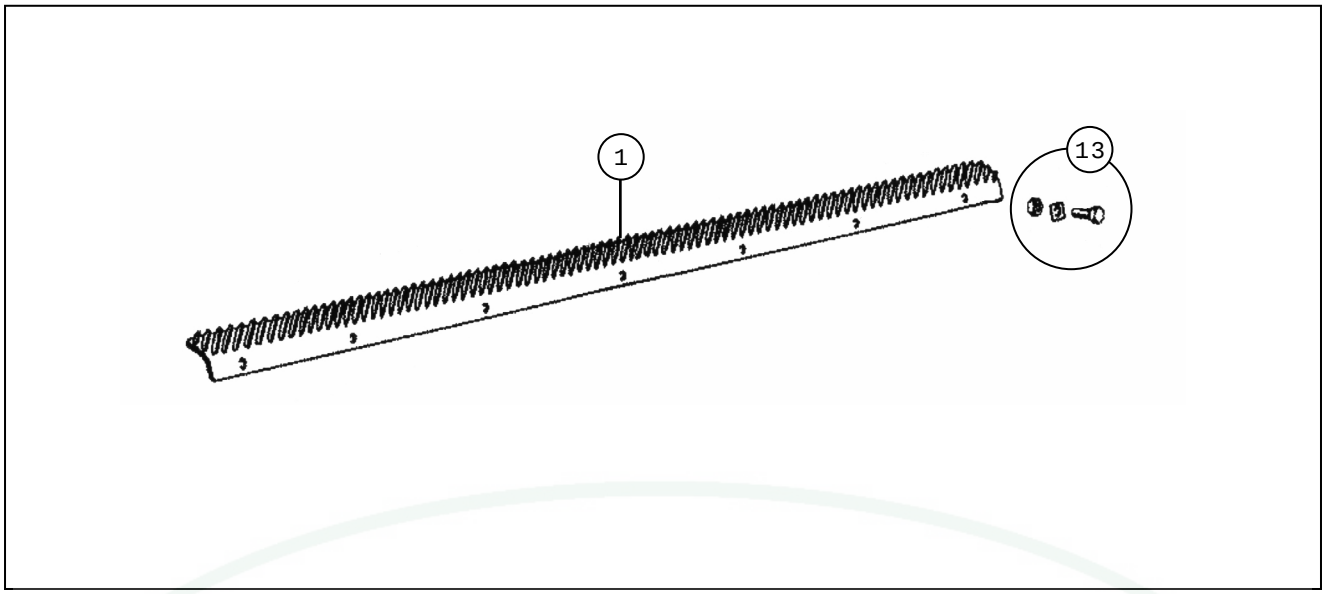

Trinciapaglia - *Straw Chopper*

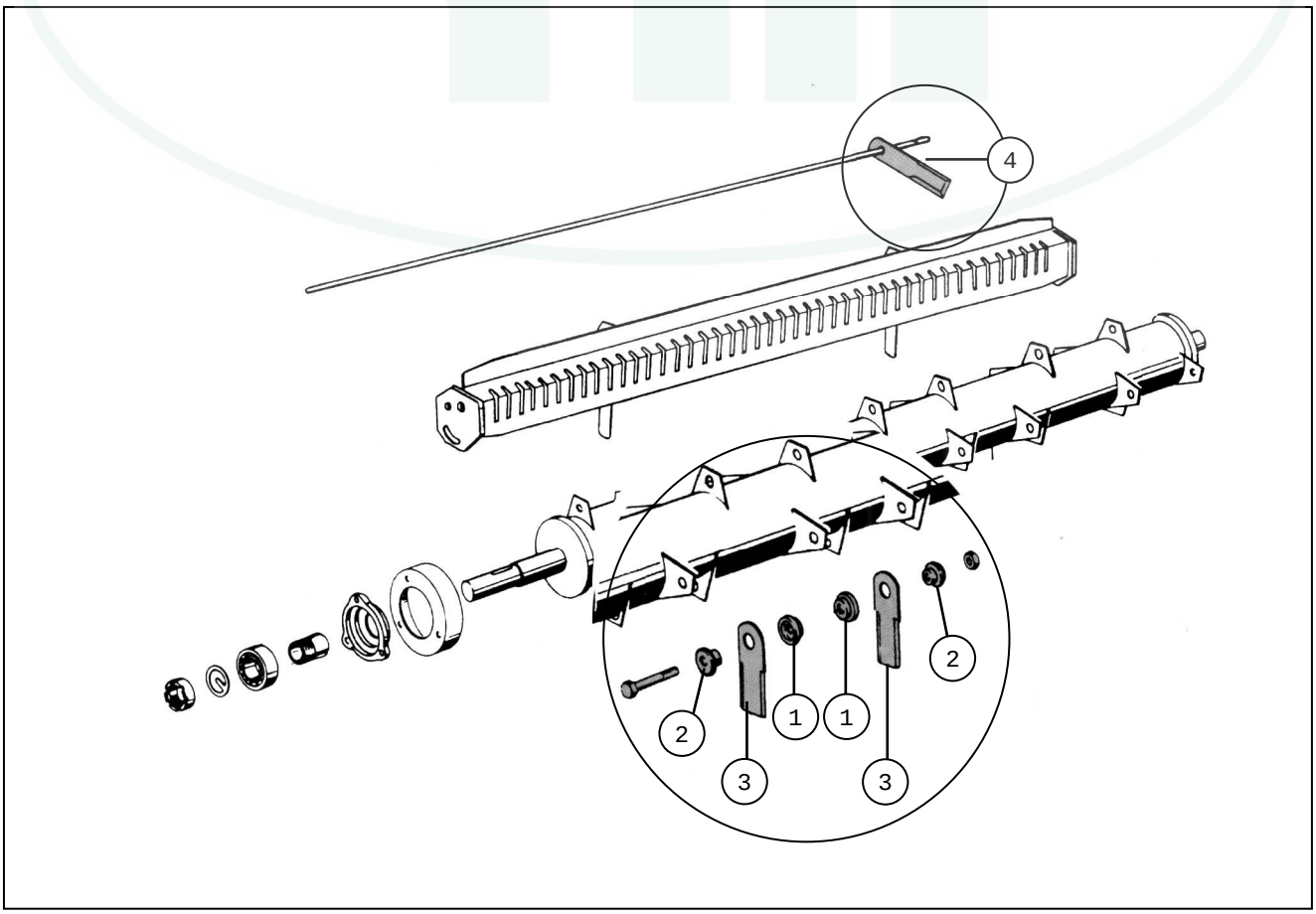

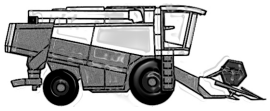

CASE I.H.C.

Pos.	Codice Originale	Codice RIMA	Descrizione Description	Applicazione Application	Conf. Pack.
			BATTITORE *Treshing Device*		
01	3158647R2	RM20-039	Rasp bar set	I.H.C. - mm. 1305 Mod. 531	1
	3158648R2	RM20-049	Rasp bar set	I.H.C. - mm. 1305 Mod. 531	1
	3161017R1	RM20-040	Rasp bar set	I.H.C. - mm. 1050 Mod. 541	1
	3161018R1	RM20-052	Rasp bar set	I.H.C. - mm. 1050 Mod. 541	1
	3166389R1	RM20-054	Rasp bar set	I.H.C. - mm. 1305 Mod. 953	1
	3166390R1	RM20-042	Rasp bar set	I.H.C. - mm. 1305 Mod. 953	1
	792970R91H	RM20-041	Rasp bar set	I.H.C. - mm. 1305 Mod. 891	1
	792970R91V	RM20-053	Rasp bar set	I.H.C. - mm. 1305 Mod. 891	1
13		RM20-060	Bolt	I.H.C.	1
			TRINCIAPAGLIA *Straw Chopper*		
01	1322242C2	RM20-224	Inner bushing		1
02	1322243C2	RM20-225	Outer bushing	I.H.C.	1
03	1322241C2	RM39-045	Straw chopper blade	I.H.C.	20
	1994760C4	RM39-076	Straw chopper blade	I.H.C.	20
04	1322233C2	RM39-039	Counterknife		20
	1322233C2/D	RM39-043	Counterknife	I.H.C. = 40151/2	20

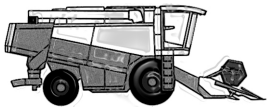

CASE I.H.C.

Pos.	Codice Originale	Codice RIMA	Descrizione Description	Applicazione Application	Conf. Pack.
			VARIE *Various*		
	1303116C1	**RM20-055**	**Rubber paddle**	145x70	**10**
	1317614C92	**RM20-024**	**Rubber paddle**	198x95	**10**
	3156886R1	**RM20-059**	**Sprocket**		**1**
	793248R2	**RM20-058**	**Sprocket**		**1**

Pos.	Codice Originale	Codice RIMA	Descrizione Description	Applicazione Application	Conf. Pack.
			CINGHIE *Belts*		
	123305A1		Belt		1
	123306A1		Belt		1
	123307A1		Belt		1
	1250587C1		Belt		1
	1260258C2		Belt		1
	1276589C1		Belt		1
	1276634C1		Belt		1
	1276707C1		Belt		1
	1285320C1		Belt		1
	1302174C1		Belt		1
	130724C91		Belt		1
	1308489C1		Belt		1
	1308489C2		Belt		1
	131201C91		Belt		1
	131201C92		Belt		1
	1313094C1		Belt		1
	1313095C1		Belt		1
	1313095C2		Belt		1
	1313097C2		Belt		1
	1313097C3		Belt		1
	1315074C1		Belt		1
	1315168C1		Belt		1
	1315265C1		Belt		1
	1315266C1		Belt		1
	1319245C1		Belt		1
	1321564C2		Belt		1
	1321565C1		Belt		1
	132374C1		Belt		1
	1325050C1		Belt		1
	1330311C1		Belt		1
	1330311C2		Belt		1
	1330499C1		Belt		1
	1336075C1		Belt		1
	1336202C1		Belt		1
	1336591C1		Belt		1
	1336609C1		Belt		1
	1336610C1		Belt		1
	1347157C1		Belt		1
	1347160C1		Belt		1

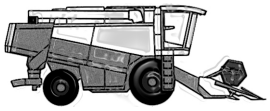

CASE I.H.C.

Pos.	Codice Originale	Codice RIMA	Descrizione Description	Applicazione Application	Conf. Pack.
	1347387C1		Belt		1
	135074C1		Belt		1
	135462C1		Belt		1
	135594C1		Belt		1
	1407035R1		Belt		1
	1407123R1		Belt		1
	1407324R1		Belt		1
	1408761R1		Belt		1
	1408840R1		Belt		1
	1408855R1		Belt		1
	1409652R1		Belt		1
	1410094R1		Belt		1
	1410106R1		Belt		1
	1410279R1		Belt		1
	1410462R1		Belt		1
	150433C1		Belt		1
	150436C2		Belt		1
	150816C1		Belt		1
	153301C1		Belt		1
	153359C1		Belt		1
	1541569C1		Belt		1
	1541700C1		Belt		1
	1541702C1		Belt		1
	158797C1		Belt		1
	160173C1		Belt		1
	160870C1		Belt		1
	160871C1		Belt		1
	161820C1		Belt		1
	164006C1		Belt		1
	164550R2		Belt		1
	165053C2		Belt		1
	167031C2		Belt		1
	167099C		Belt		1
	167099C1		Belt		1
	170948C1		Belt		1
	170954C11		Belt		1
	171101C2		Belt		1
	171130C1		Belt		1
	172230C1		Belt		1
	172360C1		Belt		1
	173110C1		Belt		1

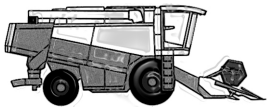

CASE I.H.C.

Pos.	Codice Originale	Codice RIMA	Descrizione Description	Applicazione Application	Conf. Pack.
	174509C1		Belt		1
	178019C1		Belt		1
	179007C1		Belt		1
	181012C1		Belt		1
	181013C1		Belt		1
	181055C1		Belt		1
	181359C1		Belt		1
	182619C1		Belt		1
	182945C1		Belt		1
	183049C1		Belt		1
	186377C1		Belt		1
	186509C2		Belt		1
	187415C2		Belt		1
	188213C1		Belt		1
	188716C1		Belt		1
	191241C1		Belt		1
	191244C1		Belt		1
	191288C2		Belt		1
	191290C1		Belt		1
	191291C1		Belt		1
	191305C1		Belt		1
	192360C1		Belt		1
	192738C1		Belt		1
	193923C3		Belt		1
	193945C1		Belt		1
	194528C1		Belt		1
	1947157C1		Belt		1
	1947160C1		Belt		1
	195143C1		Belt		1
	195396C2		Belt		1
	196370C1		Belt		1
	196371C1		Belt		1
	1970115C1		Belt		1
	1970116C1		Belt		1
	197411C1		Belt		1
	197412C1		Belt		1
	197414C1		Belt		1
	197416C1		Belt		1
	197480C1		Belt		1
	197480C2		Belt		1
	197482C1		Belt		1

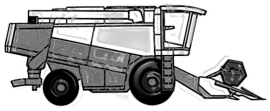

CASE I.H.C.

Pos.	Codice Originale	Codice RIMA	Descrizione Description	Applicazione Application	Conf. Pack.
	1979149C1		Belt		1
	1979606C1		Belt		1
	197960C1		Belt		1
	1989217C1		Belt		1
	200380C1		Belt		1
	200381C1		Belt		1
	200381C2		Belt		1
	201092C1		Belt		1
	203170C1		Belt		1
	203612C1		Belt		1
	203644C1		Belt		1
	203651C1		Belt		1
	203658C1		Belt		1
	208885C1		Belt		1
	209002C1		Belt		1
	209038C1		Belt		1
	210185C1		Belt		1
	214522C1		Belt		1
	217564C1		Belt		1
	217636C1		Belt		1
	217698C1		Belt		1
	217699C1		Belt		1
	217700C1		Belt		1
	217701C1		Belt		1
	217702C1		Belt		1
	217703C1		Belt		1
	23898K		Belt		1
	274705R1		Belt		1
	280210C2		Belt		1
	3155127R1		Belt		1
	3155177R1		Belt		1
	3155178R1		Belt		1
	3156220R92		Belt		1
	3156221R92		Belt		1
	3157009R1		Belt		1
	3157094R1		Belt		1
	3157600R1		Belt		1
	3157738R1		Belt		1
	3157741R1		Belt		1
	3157994R1		Belt		1
	3158455R1		Belt		1

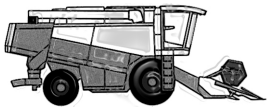

CASE I.H.C.

Pos.	Codice Originale	Codice RIMA	Descrizione Description	Applicazione Application	Conf. Pack.
	3158811R1		Belt		1
	3159827R1		Belt		1
	3167149R1		Belt		1
	3167189R1		Belt		1
	3167361R1		Belt		1
	3167489R1		Belt		1
	3167653R2		Belt		1
	3167797R1		Belt		1
	3168030R2		Belt		1
	3168030R3		Belt		1
	3168669R1		Belt		1
	3169965R91		Belt		1
	3170159R1		Belt		1
	3170210R1		Belt		1
	3172276R1		Belt		1
	3173115R1		Belt		1
	3173164R1		Belt		1
	3173480R1		Belt		1
	3173717R1		Belt		1
	3175036R1		Belt		1
	3175110R1		Belt		1
	3175336R1		Belt		1
	3175432R1		Belt		1
	3176321R1		Belt		1
	3176449R1		Belt		1
	3176489R1		Belt		1
	3179516R1		Belt		1
	352095C1		Belt		1
	379966R1		Belt		1
	395539R1		Belt		1
	396829R1		Belt		1
	397175R1		Belt		1
	403348R1		Belt		1
	403617R1		Belt		1
	452864R1		Belt		1
	488082R2		Belt		1
	492103C1		Belt		1
	532031R2		Belt		1
	532746R1		Belt		1
	537072R92		Belt		1
	553456R2		Belt		1

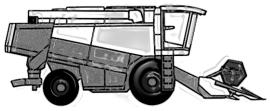

CASE I.H.C.

Pos.	Codice Originale	Codice RIMA	Descrizione Description	Applicazione Application	Conf. Pack.
	558141R1		Belt		1
	559064R1		Belt		1
	562088R1		Belt		1
	565565R1		Belt		1
	588894R1		Belt		1
	589622R1		Belt		1
	596222R1		Belt		1
	599060R1		Belt		1
	599428R1		Belt		1
	59969C91		Belt		1
	607666R1		Belt		1
	610521C1		Belt		1
	610521R1		Belt		1
	610521R91		Belt		1
	617910C1		Belt		1
	617910R1		Belt		1
	632102R1		Belt		1
	632702R1		Belt		1
	662901R1		Belt		1
	665970R1		Belt		1
	666390R1		Belt		1
	667068R1		Belt		1
	668057R1		Belt		1
	668287R2		Belt		1
	670144R1		Belt		1
	670278R1		Belt		1
	670282R1		Belt		1
	672177R1		Belt		1
	672974R2		Belt		1
	673026R3		Belt		1
	674965R1		Belt		1
	676835R1		Belt		1
	726276R1		Belt		1
	726278R1		Belt		1
	726285R1		Belt		1
	769482R1		Belt		1
	790522R1		Belt		1
	793037R2		Belt		1
	793051R2		Belt		1
	793094R2		Belt		1
	793398R2		Belt		1

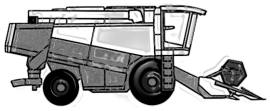

CASE I.H.C.

Pos.	Codice Originale	Codice RIMA	Descrizione Description	Applicazione Application	Conf. Pack.
	793417R1		Belt		1
	794484R1		Belt		1
	795464R2		Belt		1
	824881C1		Belt		1
	829131C1		Belt		1
	829356C1		Belt		1
	829627C1		Belt		1
	829920C1		Belt		1
	829921C1		Belt		1
	830122C1		Belt		1
	830123C1		Belt		1
	832044C2		Belt		1
	832077C1		Belt		1
	874097C1		Belt		1
	937806R1		Belt		1
	J911572		Belt		1
	J911573		Belt		1
	J911574		Belt		1

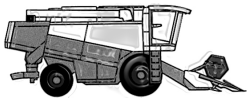

FORTSCHRITT MDW

Barra di Taglio - *Cutting Bar*

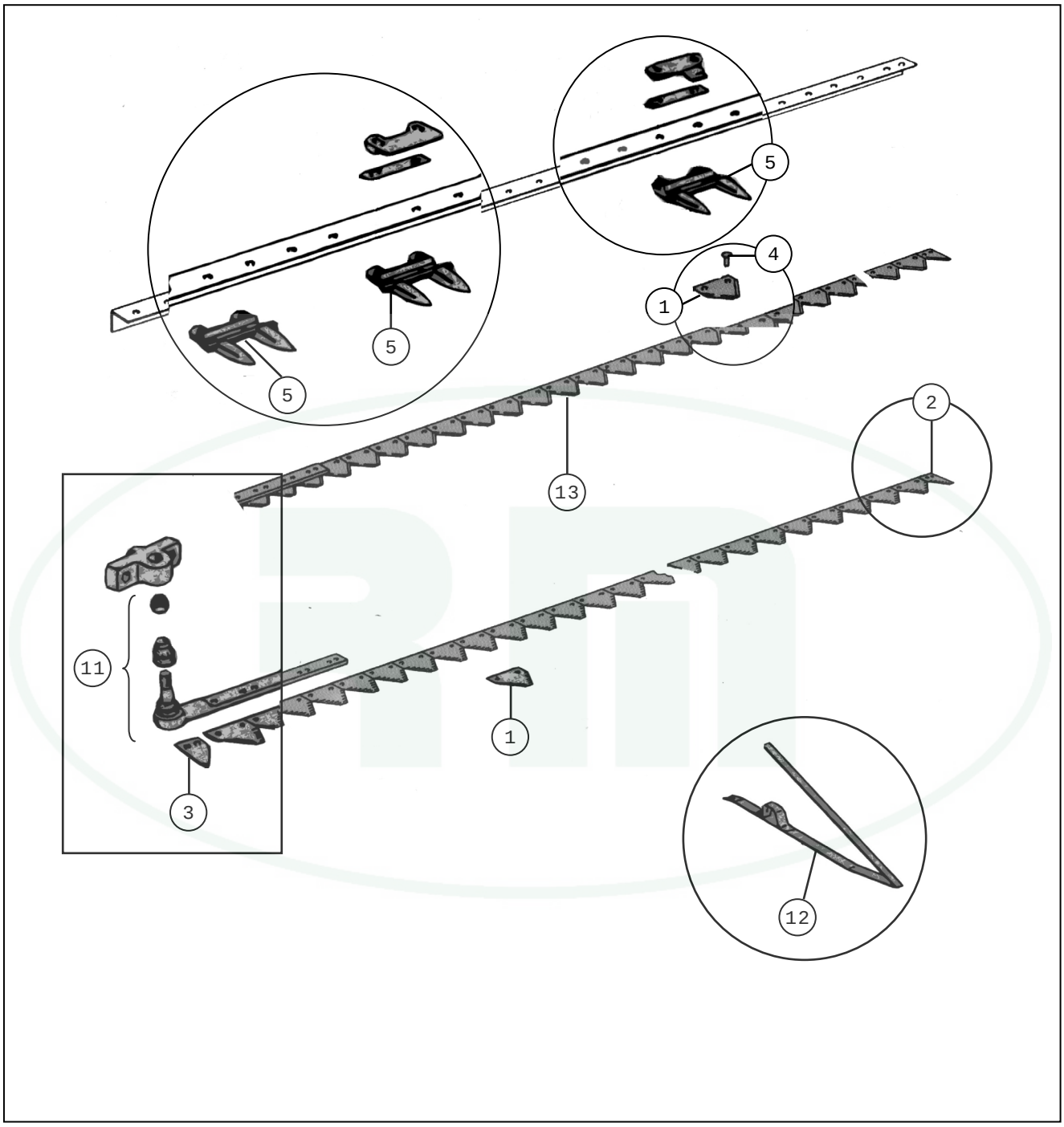

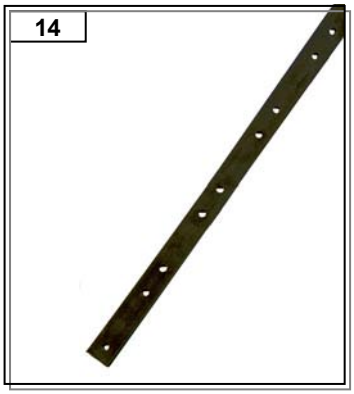

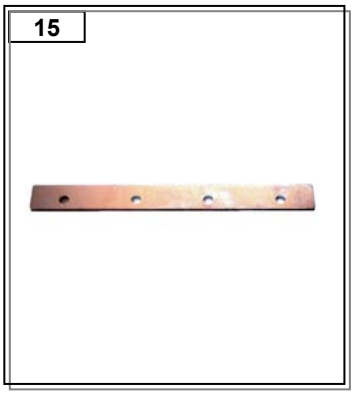

US = rigata sotto
TS = rigata sopra

TTQST = testa tonda quadro sotto t.
TT = testa tonda
TPSV = testa piana svasata

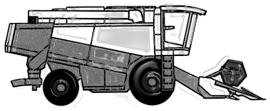

FORTSCHRITT MDW

Pos.	Codice Originale	Codice RIMA	Descrizione Description	Applicazione Application	Conf. Pack.
			BARRA DI TAGLIO *Cutterbar*		
01	4105.00037.0	RM31-009	Cleaning plate		1
	4105.00058.8	RM31-005	Knife section	D2297	25
	4105.00058.8/2,7	RM31-052	Knife section	D2297	25
	4105.00058.8/A	RM31-006	Knife section	E.512	25
	4260.71424.6	RM31-021	Knife section	420100045	25
	E.18	RM31-001	Knife section		25
03	4252.13394.0	RM31-008	Thick		1
04	4260.71641.6	RM31-022	Bolt	6x16	50
	9971.90126.6	RM31-043	Rivet	5x16	2
	9971.90129.0	RM31-042	Rivet	5x20	2
05	4105.00083.6	RM31-057	Finger plate		25
	4105.00085.2	RM31-011	Double finger		1
	4105.00095.7	RM31-018	Simple finger	4105.00085.2/A	1
	4260.71417.4	RM31-023	Double finger	410.100.001	1
	4260.71418.2	RM31-024	Double finger	410.300.024 / 060531001	1
11		RM31-040	Silentblock	517.140.001	1
	00.379404.7	RM31-026	Head support		1
	003794047	RM31-060	Bushing		1
	060518141	RM31-059	Knife head	420301301 - 44345-01	1
	4131.77102.0	RM31-010	Silentblock		1
	4252.12393.2	RM31-007	Knife head		1
	4260.71422.1	RM31-025	Knife head		1
12		RM31-055	Holder		1
	00.379998.4	RM31-030	Crop lifter		1
	4264.71629.3	RM31-041	Crop lifter		1
13	02.118930.7/V	RM31-034	Complete knife		1
	02.118936.4/V	RM31-035	Complete knife		1
	02.118942.8/V	RM31-036	Complete knife		1
	061036784	RM31-061	Complete knife	6,00 mts.	1
	061036792	RM31-065	Complete knife	6,60 mts.	1
	061046640	RM31-063	Complete knife	5,40 mts.	1
	061048136	RM31-064	Complete knife	4,80 mts.	1
	061062070	RM31-062	Complete knife	4,20 mts.	1
	4251.12440.3	RM31-012	Complete knife		1
	4252.12392.4	RM31-013	Complete knife		1
	4253.12426.6	RM31-014	Complete knife		1
	4261.71541.4/V	RM31-044	Complete knife		1

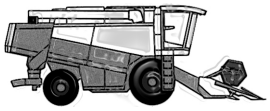

FORTSCHRITT MDW

Pos.	Codice Originale	Codice RIMA	Descrizione Description	Applicazione Application	Conf. Pack.
13	4262.71543.8/V	RM31-045	Complete knife		1
	4263.71545.3/V	RM31-046	Complete knife		1
	4264.71531.5/V	RM31-047	Complete knife		1
14		RM31-031	Knife back		1
		RM31-032	Knife back		1
		RM31-033	Knife back		1
		RM31-048	Knife back		1
		RM31-049	Knife back		1
		RM31-050	Knife back		1
		RM31-051	Knife back		1
	4251.12441.1	RM31-015	Knife back		1
	4252.12394.0	RM31-016	Knife back		1
	4253.12427.0	RM31-017	Knife back		1
15	02.118949.3	RM31-027	Guide	410.405.005	1
	4260.71419.0	RM31-028	Guide	410.401.005	1
	4260.71420.5	RM31-029	Guide	410.400.005	1

Notes

Coclea - *Auger*

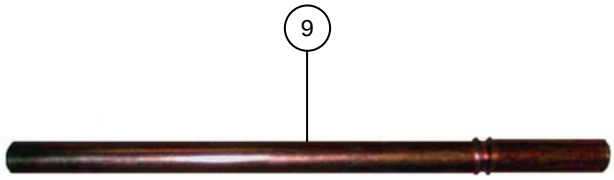

Battitore – *Treshing Device*

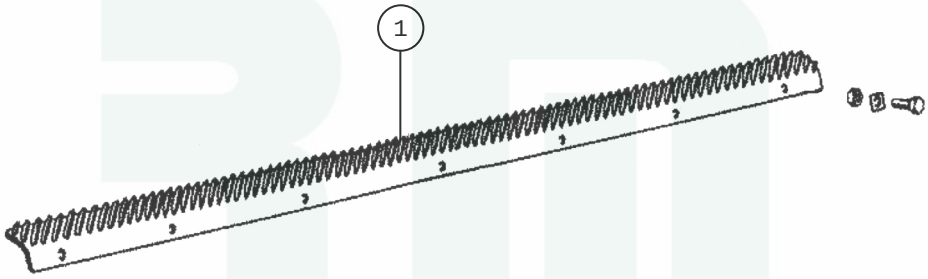

Elevatore – *Grain Elevator*

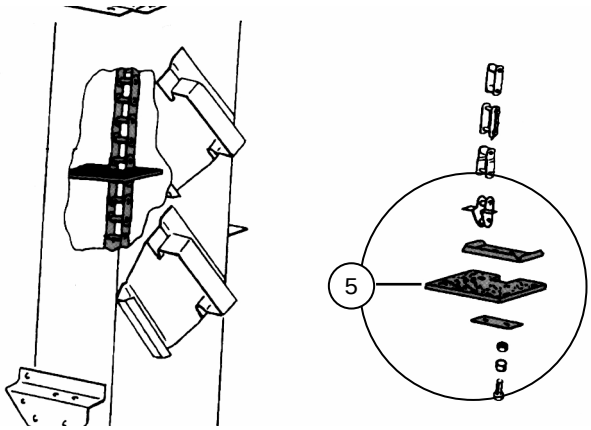

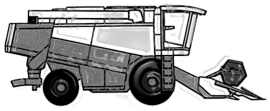

FORTSCHRITT MDW

Pos.	Codice Originale	Codice RIMA	Descrizione Description	Applicazione Application	Conf. Pack.
			COCLEA *Auger*		
09	4241.04152.4	RM31-004	Retractable finger		10
			BATTITORE *Treshing Device*		
01	4221.61828	RM31-019	Rasp bar set	Mod. E514	1
	4221.61829	RM31-053	Rasp bar set	Mod. E514	1
	4240.02573	RM31-020	Rasp bar set	Mod. E516	1
	4240.02574	RM31-054	Rasp bar set	Mod. E516	1
			ELEVATORE *Elevator*		
05	4221.66799.2	RM31-002	Rubber paddle		10
	4240.02893.7	RM31-056	Rubber paddle		10

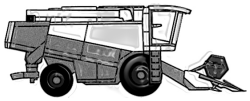

LAVERDA

Barra di Taglio - *Cutting Bar*

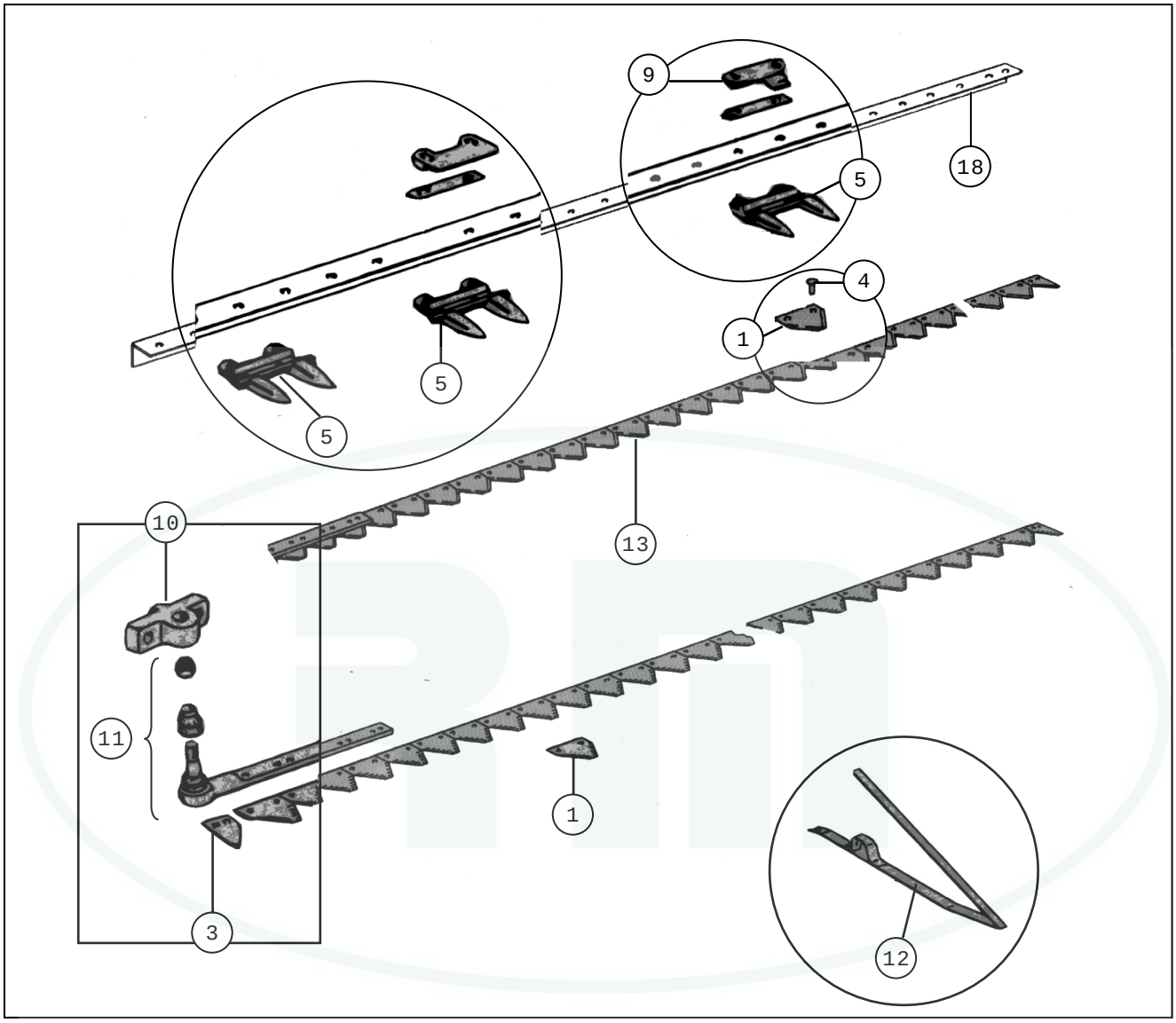

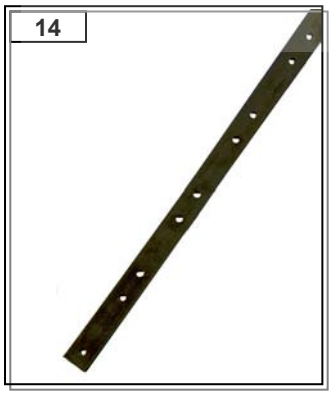

US = rigata sotto
TS = rigata sopra

TTQST = testa tonda quadro sotto t.
TT = testa tonda
TPSV = testa piana svasata

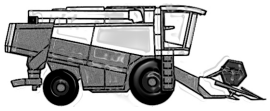

LAVERDA

Pos.	Codice Originale	Codice RIMA	Descrizione Description	Applicazione Application	Conf. Pack.
			BARRA DI TAGLIO *Cutterbar*		
01	303023363	RM22-139	Cleaning plate	LF41	25
	320802350	RM22-070	Knife section	2,7 mm.	25
	321219850	RM22-003	Knife section	2,7 mm. - 365110	25
	322702850	RM22-340	Knife section	2,7 mm. - SCH	25
	340443003	RM22-004	Knife section	2,0 mm. - 242S	25
	340443003cr	RM22-127	Knife section	2,0 mm. - LF9Cr.	25
	340443023	RM22-002	Knife section	2,7 mm. - UV - 322481	25
03	301579464	RM22-014	Plate		1
04	10902334	RM22-065	Bolt	6x18 SCH-011006018	100
	10902634	RM22-067	Bolt	6X28 SCH-011006028	100
	301342630	RM22-022	Screw	11x30	50
	301342635	RM22-023	Screw	11x35	50
	301350007	RM22-024	Nut	M.11	50
	301540161	RM22-037	Rivet		2
	322707450	RM22-143	Bolt	21-055	100
	350371314	RM22-021	Rivet	5,2X14	2
	350371317	RM22-046	Rivet	5,2x17	2
	350371322	RM22-047	Rivet	5,2x22	2
	350371328	RM22-125	Rivet	5,2x28	2
05	300033227	RM22-128	Simple finger		1
	300139068	RM22-151	Double finger	727427	1
	301896130	RM22-005	Double finger	261	1
	321115050	RM22-001	Double finger		1
	321115150	RM22-148	Double finger		1
	321240150	RM22-069	Quadruple finger	SOIA - GB310	1
	322702450	RM22-341	Double finger	410000001	1
	322702550	RM22-261	Double finger	410300041	1
09	300011362	RM22-006	Knife clip		10
	300019116	RM22-007	Knife clip		10
	300033286	RM22-131	Knife clip		10
	321114850	RM22-147	Knife clip		10
	321167050	RM22-099	Knife clip		10
	321240550	RM22-098	Knife clip	89826150	10
	327840055	RM1402	Knife clip - RM knives		10
11	301579410	RM22-010	Knife head		1
	301688610	RM22-009	Knife head		1
	303212663	RM22-129	Knife head		1

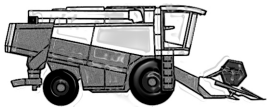

LAVERDA

Pos.	Codice Originale	Codice RIMA	Descrizione Description	Applicazione Application	Conf. Pack.
11	311301110	RM22-011	Knife head		1
	311441000	RM22-020	Ball joint		1
	311458660	RM22-012	Knife head		1
	321219951	RM22-249	Knife head	311458660	1
	322702950	RM22-342	Knife head	SCH 420277301	1
	322703050	RM22-343	Bushing	SCH 530040477	1
	322703150	RM22-104	Bushing	SCH-420100018	25
	322705650	RM22-149	Nut	M12 SCH-110001012	50
	322708050	RM22-150	Bolt	12x45 SCH-110001245	25
	322717750	RM22-160	Grease nipple	SCH-100971416	1
	322717850	RM22-233	Bolt	10x35 SCH-109121035	50
12	322709650	RM22-252	Crop lifter	AS-100	1
	322709700	RM22-262	Holder	KM-3	1
	322710650	RM22-266	Crop lifter	AS-120	1
13	300037385	RM22-263	Complete knife		1
	300037386	RM22-264	Complete knife		1
	300114585	RM22-071	Complete knife		1
	300114586	RM22-072	Complete knife		1
	300114587	RM22-073	Complete knife		1
	300114588	RM22-074	Complete knife		1
	300114589	RM22-075	Complete knife		1
	300114590	RM22-076	Complete knife		1
	300114591	RM22-077	Complete knife		1
	300117668	RM22-267	Complete knife		1
	300118628	RM22-268	Complete knife		1
	300133288	RM22-269	Complete knife		1
	300135889	RM22-265	Complete knife		1
	301176661	RM22-332	Complete knife	300117666	1
	301176671	RM22-333	Complete knife	300117667	1
	301688651	RM22-050	Complete knife		1
	301688652	RM22-051	Complete knife		1
	301688653	RM22-052	Complete knife		1
	303212650	RM22-136	Complete knife		1
	303212651	RM22-137	Complete knife		1
	303212652	RM22-138	Complete knife		1
	311301150	RM22-053	Complete knife		1
	311301151	RM22-054	Complete knife		1
	311301152	RM22-055	Complete knife		1
	311301153	RM22-056	Complete knife		1
	311301154	RM22-057	Complete knife		1

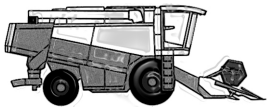

LAVERDA

Pos.	Codice Originale	Codice RIMA	Descrizione Description	Applicazione Application	Conf. Pack.
13	311301155	RM22-058	Complete knife		1
	320900050	RM22-271	Complete knife		1
	321219950	RM22-270	Complete knife		1
	321220150	RM22-234	Complete knife		1
	321220250	RM22-235	Complete knife		1
	321220350	RM22-236	Complete knife		1
	321220450	RM22-237	Complete knife		1
	321220550	RM22-238	Complete knife		1
	321220650	RM22-239	Complete knife		1
	321220750	RM22-240	Complete knife		1
	322704000	RM22-198	Middlepiece	SCH-428000002	1
	322704100	RM22-173	Endpiece	SCH-429000007	1
	322704200	RM22-174	Headpiece	SCH-427113001	1
	322704300/V	RM22-350	Complete knife		1
	322704400/V	RM22-351	Complete knife		1
	322704500/V	RM22-352	Complete knife		1
	322704600/V	RM22-353	Complete knife		1
	322704700/V	RM22-354	Complete knife		1
	322709500	RM22-175	Endpiece	SCH-429000008	1
14		RM22-345	Knife back	SCH	1
		RM22-346	Knife back	SCH	1
		RM22-347	Knife back	SCH	1
		RM22-348	Knife back	SCH	1
		RM22-349	Knife back	SCH	1
	303212660	RM22-133	Knife back	20x5,5x2356	1
	303212661	RM22-134	Knife back	20x5,5x2812	1
	303212662	RM22-135	Knife back	20x5,5x3268	1
	327840056	RM22-251	Connector bar	RM1402	1
	391210113	RM22-083	Knife back	20x5,5x3756	1
	391210114	RM22-084	Knife back	20x5,5x4366	1
	391210117	RM22-082	Knife back	20x5,5x3299	1
	391210118	RM22-086	Knife back	20x5,5x5128	1
	391210119	RM22-088	Knife back	20x5,5x6195	1
	391210120	RM22-085	Knife back	20x5,5x4976	1
	391210121	RM22-087	Knife back	20x5,5x5586	1
	391210125	RM22-078	Knife back	20x5,5x2758	1
	391210126	RM22-079	Knife back	20x5.5x3215	1
	391210127	RM22-080	Knife back	20x5,5x3672	1
	391210128	RM22-081	Knife back	20x5,5x4281	1
	391210204	RM22-089	Knife back	20x5,5x3276	1

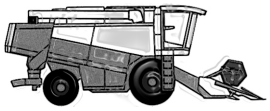

LAVERDA

Pos.	Codice Originale	Codice RIMA	Descrizione Description	Applicazione Application	Conf. Pack.
14	391210205	RM22-090	Knife back	20x5,5x3734	1
	391210206	RM22-091	Knife back	20x5,5x4344	1
	391210207	RM22-092	Knife back	20x5,5x4953	1
	391210208	RM22-093	Knife back	20x5,5x5562	1
	391210210	RM22-094	Knife back	20x5,5x6172	1
	391210211	RM22-095	Knife back	20x5,5x6782	1
	391210507	RM22-096	Knife back	20x5,5x7696	1
	391210979	RM22-241	Knife back	20x6x3276	1
	391210980	RM22-247	Knife back	20x6x6782	1
	391210981	RM22-248	Knife back	20x6x7696	1
	391210982	RM22-246	Knife back	20x6x6172	1
	391210983	RM22-245	Knife back	20x6x5562	1
	391210984	RM22-244	Knife back	20x6x4953	1
	391210985	RM22-243	Knife back	20x6x4344	1
	391210986	RM22-242	Knife back	20x6x3734	1
15	300010107	RM22-064	Wearing plate		1
	300040617	RM22-130	Wearing plate		1
	300112140	RM22-008	Wearing plate		1
	311458662	RM22-013	Wearing plate		1
	321166850	RM22-100	Wearing plate		1
16	340443001	RM22-132	Finger plate		25
17	301579465	RM22-015	Support		1
	301579466	RM22-016	Support		1
	301579467	RM22-017	Support		1
	301579468	RM22-018	Support		1
	301688665	RM22-019	Support		1
	322702650	RM22-176	Spacebar	SCH-410401005	1
	322702750	RM22-177	Spacebar	SCH-410400005	1
	322707150	RM22-188	Connector bar	21x6 SCH-322707150	1
	322707350	RM22-189	Bushing	SCH-420100017	25
18	300131946	RM22-190	Anglebar	SCH-14126	1
	300131951	RM22-191	Anglebar	SCH-14124	1
	300132576	RM22-192	Anglebar	SCH-14127	1
	300132577	RM22-193	Anglebar	SCH-14128	1
	300132578	RM22-194	Anglebar	SCH-14129	1
	300135668	RM22-195	Anglebar	SCH-14130	1
	300135867	RM22-196	Anglebar	SCH-14131	1
	320954650	RM22-197	Anglebar	SCH-14123	1
	321006850	RM22-199	Anglebar	SCH-14125	1

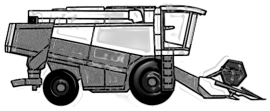

LAVERDA

Pos.	Codice Originale	Codice RIMA	Descrizione Description	Applicazione Application	Conf. Pack.
18	322703350	RM22-272	Anglebar	SCH-322703350	1
	322703450	RM22-273	Anglebar	SCH-440113540	1
	322703550	RM22-274	Anglebar	SCH-440113600	1
	322703650	RM22-275	Anglebar	SCH-440113660	1

LAVERDA

Comando Lama - *Gearbox*

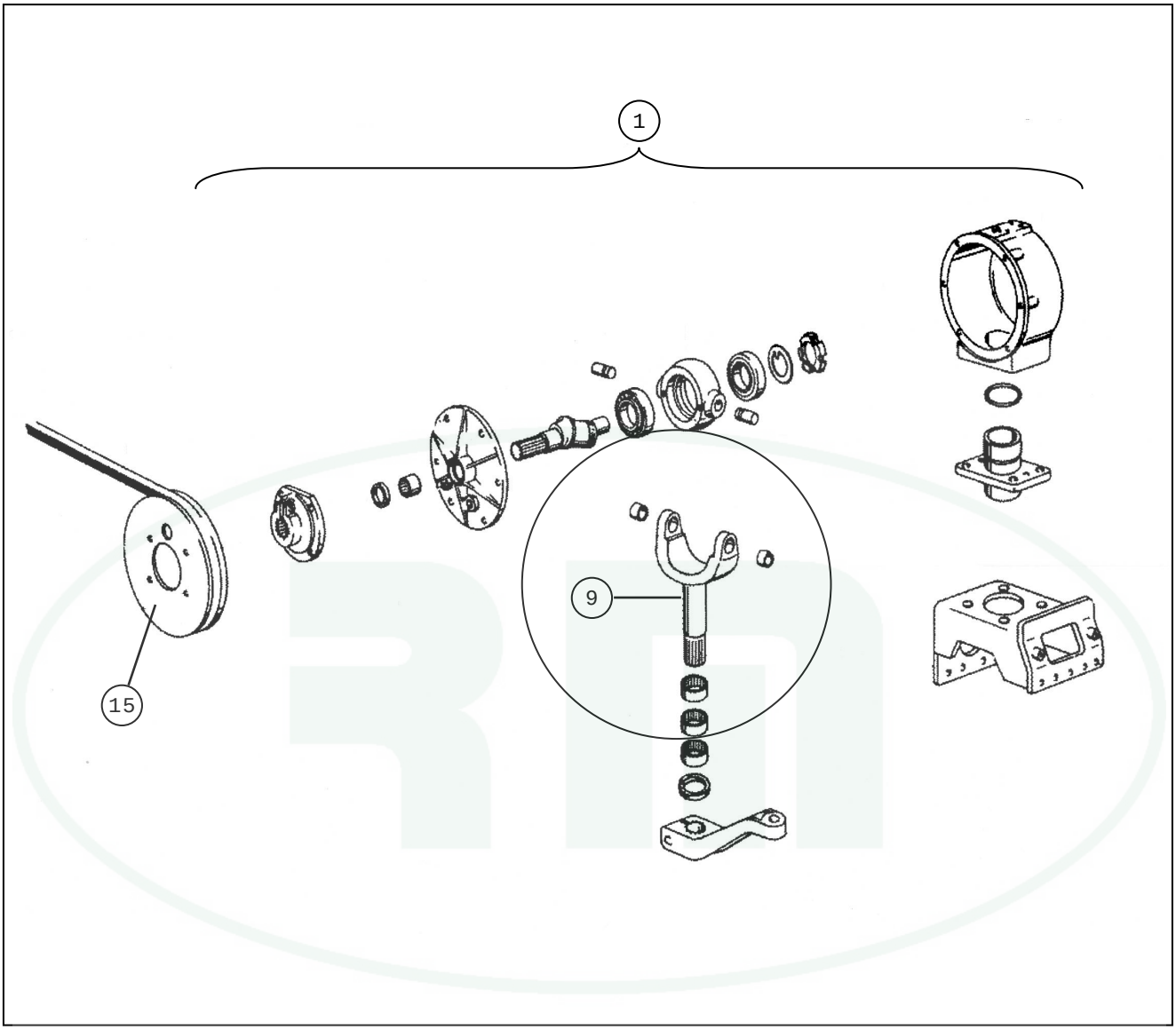

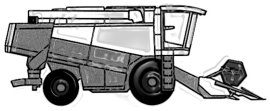

LAVERDA

Pos.	Codice Originale	Codice RIMA	Descrizione Description	Applicazione Application	Conf. Pack.
			COMANDO LAMA *Gearbox*		
	322712050	RM22-101	Connector block	SCH - 571140001 - 12766	1
01	311436100	RM22-140	Knifedrive		1
	322703700	RM22-276	Knifedrive	SCH-500000059	1
	322708500	RM22-277	Knifedrive	SCH-500000065/31	1
	322711850	RM22-278	Plastic cap	SCH-220100010	1
09	300114494	RM22-126	Fork		1
15	321204050	RM22-141	Vee pulley		1
	322711950	RM22-279	Vee pulley	SCH-582212225	1
	327840113	RM22-280	Vee pulley	SCH-14467.01	1

Coclea - *Auger*

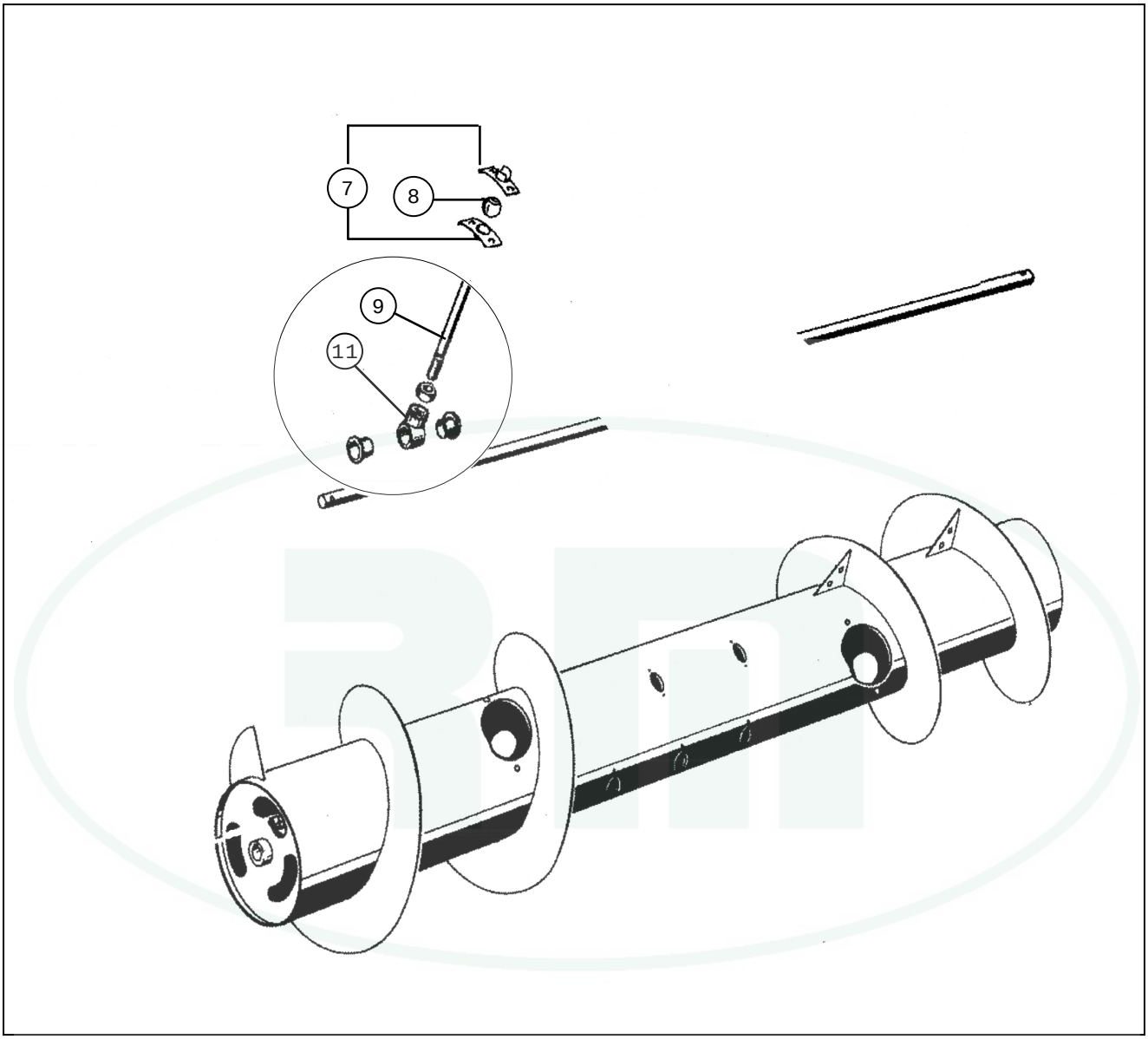

Aspo – *Reel Tines*

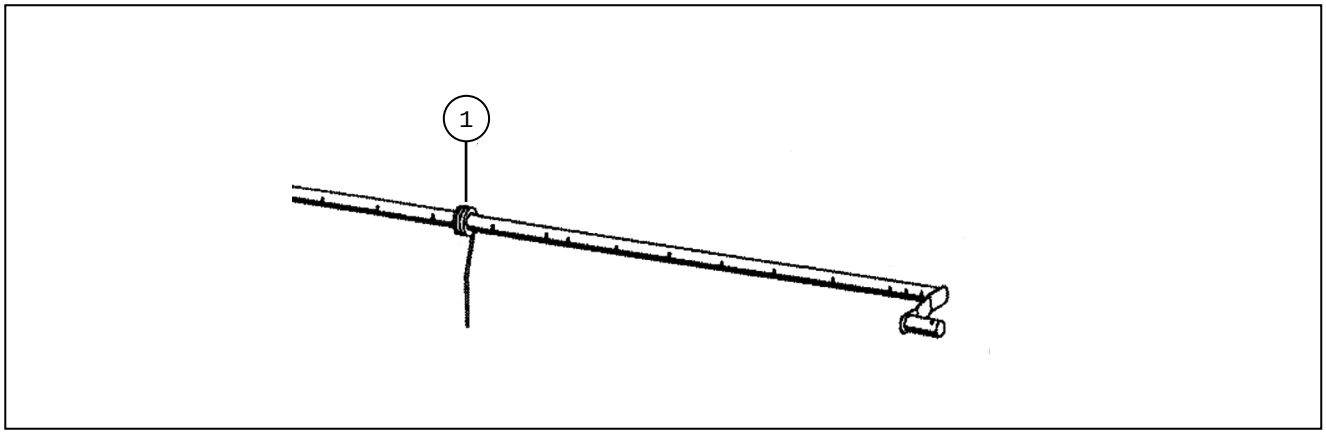

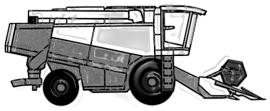

LAVERDA

Pos.	Codice Originale	Codice RIMA	Descrizione Description	Applicazione Application	Conf. Pack.
			COCLEA *Auger*		
07	300015382/3	RM22-142	Supports kit		1
	321017350/450	RM22-026	Supports kit		1
	321228050/150	RM22-025	Supports kit	300129170/2	1
08	300015644	RM22-027	Guide ball	diam. 34mm. - dito 14mm.	1
	300033642	RM22-144	Guide ball		1
	321017250	RM22-063	Guide ball	diam. 35mm. - dito 16mm.	1
09	300015772	RM22-028	Retractable finger	14x230	10
	300015772a	RM22-356	Retractable finger - RM modification	14mm.	10
	300033651	RM22-145	Retractable finger		10
	321206450	RM22-060	Retractable finger	14x230 - 321017150/1.29698	10
11		RM22-171	T bushing - RM modification	universale - 30mm.	10
		RM22-172	Pin	universale	1
			ASPO *Reel Tines*		
01	300012449	RM22-068	Reel tine		20
	300033030	RM22-146	Reel tine		20
	321023250	RM22-097	Reel tine	300114786	20
	360653406	RM22-281	Bolt	M6 SCH-001106001	25

LAVERDA

Alimentazione - *Feeder Channel*

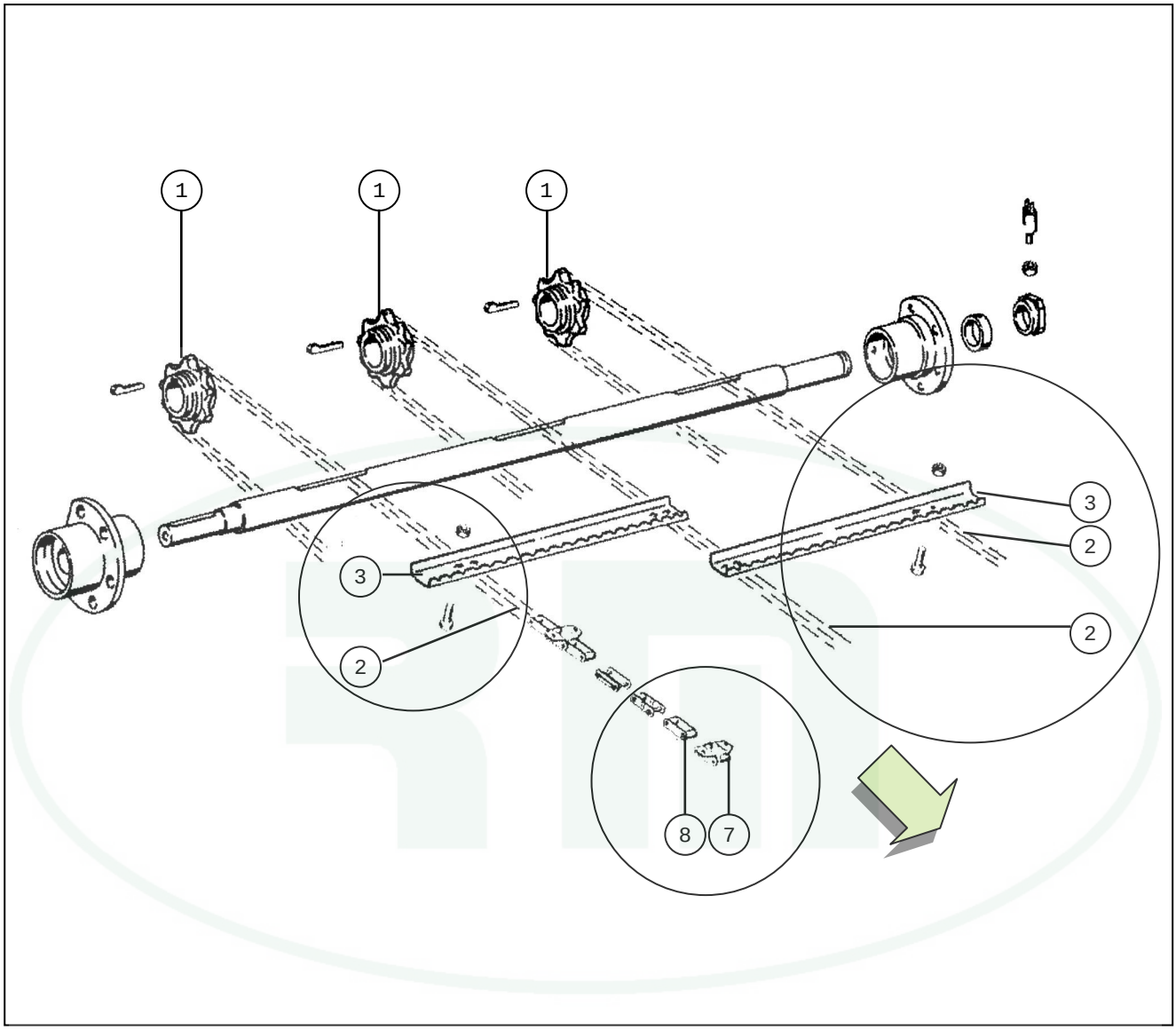

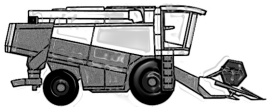

LAVERDA

Pos.	Codice Originale	Codice RIMA	Descrizione Description	Applicazione Application	Conf. Pack.
			ALIMENTAZIONE *Feeder Channel*		
01	320402150	RM22-372	Sprocket		1
02	344381116	RM22-361	Feeder chain	M152	1
	344381131	RM22-362	Feeder chain	3500/3550/3700/3790	1
	344381140	RM22-363	Feeder chain	3600/3790	1
	344381145	RM22-364	Feeder chain	3300	1
	344381265	RM22-365	Feeder chain	521/524/624	1
03	300114127	RM22-370	Chain lath	3600/3700	1
	321713550	RM22-371	Chain lath	301696631 - 3890/3900	1
07	340438000	RM22-367	Chain link		1
	344381101	RM22-369	Chain link		1
08	340438001	RM22-368	Chain link		1

LAVERDA

Battitore – *Treshing Device*

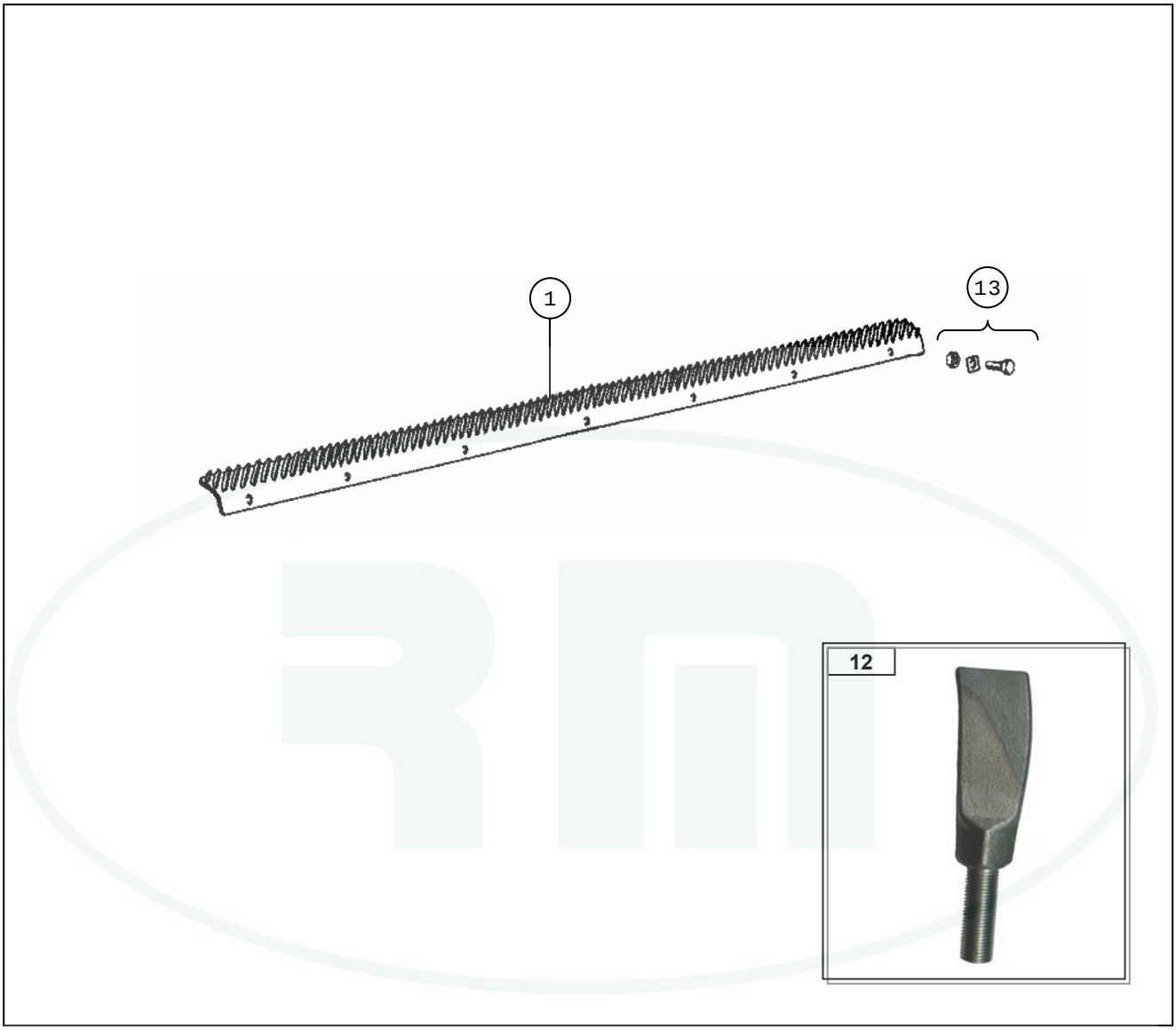

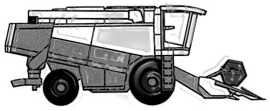

LAVERDA

Pos.	Codice Originale	Codice RIMA	Descrizione Description	Applicazione Application	Conf. Pack.
			BATTITORE *Treshing Device*		
01	301574020	RM22-107	Rasp bar set	M120/122	1
	301574021	RM22-121	Rasp bar set	M120/122	1
	311006920	RM22-102	Rasp bar set	M84 = 311006920/1	1
	311006921	RM22-116	Rasp bar set	M84 = 311006920/1	1
	311206900	RM22-109	Rasp bar set	521/152/3600/3650/3700/3750	1
	311206901	RM22-123	Rasp bar set	521/152/3600/3650/3700/3750	1
	311636300	RM22-103	Rasp bar set	3300	1
	311636400	RM22-117	Rasp bar set	3300	1
	312809600	RM22-105	Rasp bar set	M112 - 3350	1
	312809800	RM22-119	Rasp bar set	M112 - 3350	1
	313002900	RM22-108	Rasp bar set	M132	1
	313002901	RM22-122	Rasp bar set	M132	1
	313241700	RM22-110	Rasp bar set	3850/3890/3900	1
	313241800	RM22-124	Rasp bar set	3850/3890/3900	1
	320415000	RM22-106	Rasp bar set	3500/3550	1
	320415100	RM22-120	Rasp bar set	3500/3550	1
	321623600	RM22-344	Rasp bar set	MX	1
	321623800	RM22-152	Rasp bar set	MX	1
12	301172200	RM22-045	Spike tooth		1
13		RM22-153	Bolt	3300	1
		RM22-154	Bolt	M152 - 3600/3790	1
		RM22-155	Bolt	3890/3900	1

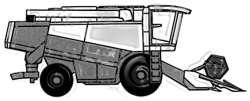

LAVERDA

Elevatore – *Grain Elevator*

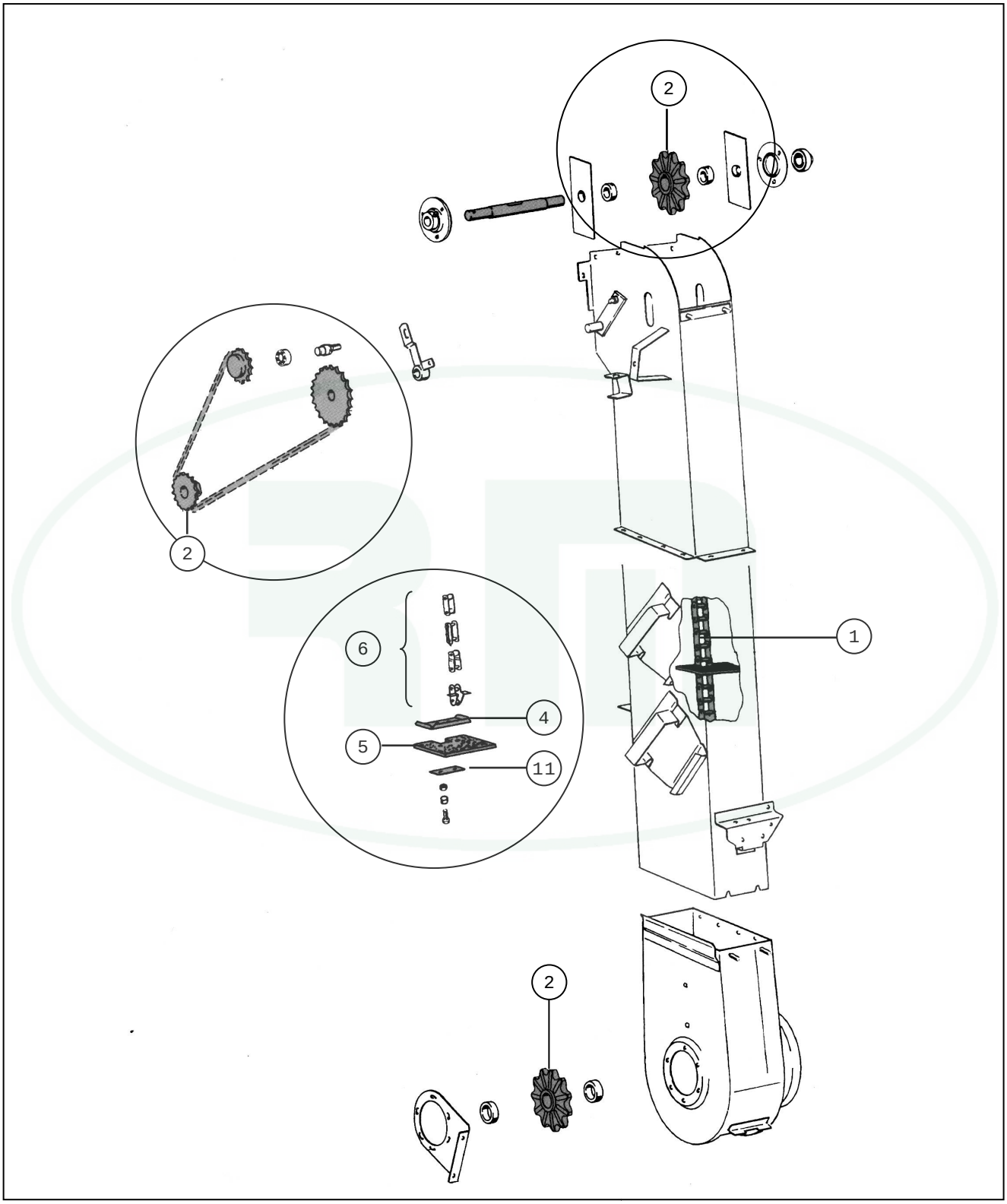

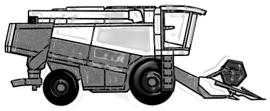

LAVERDA

Pos.	Codice Originale	Codice RIMA	Descrizione Description	Applicazione Application	Conf. Pack.
			ELEVATORE *Elevator*		
01	300116500	RM22-158	Elevator chain	MAIS - 3300	1
	300118465	RM22-159	Elevator chain	3300	1
	300136088	RM22-162	Elevator chain	3600 - 3790	1
	300136275	RM22-163	Elevator chain	3600 - 3790	1
	320496250	RM22-164	Elevator chain	3500 - 3550	1
	320531000	RM22-165	Elevator chain	MAIS - 3500/3550	1
	320694650	RM22-166	Elevator chain	MAIS - 3850/3900	1
	321862500	RM22-167	Elevator chain	MAIS - 521/524/624	1
02	300015361	RM22-157	Sprocket	3500 - 3890	1
	300132810	RM22-161	Sprocket	3600 - 3890 - 521 - 624	1
04	300116587	RM22-035	Plate	3300 - 3600 - 3700	1
	300136090	RM22-036	Plate	3600 - 3700	1
	301540162	RM22-034	Plate	3350 - 112 - 132	1
	313283961	RM22-156	Plate	3850 - 3900	1
05	300116499	RM22-030	Rubber plate	3300/3600/3700 - 110x77mm.	10
	300136089	RM22-033	Rubber plate	3600/3700 - 150x100mm.	10
	301540160	RM22-031	Rubber plate	3350/112/132 - 130x80mm.	10
	301706560	RM22-029	Rubber plate		10
	311213960	RM22-032	Rubber plate	M152 - 150x80mm.	10
	313501660	RM22-062	Rubber plate	3850/3900 - 190x100mm.	10
	321357952	RM22-335	Rubber plate		10
	321814750	RM22-061	Rubber plate	521/524/624 - 165x100	10
	321821950	RM22-334	Rubber plate	521/524/624 - 105x100	10
06	344382100	RM22-168	Chain link	Per tutti i modelli tranne 521/524	1
	344382101	RM22-169	Chain link	Per tutti i modelli tranne 521/524	1
	344382103	RM22-170	Chain link	Per tutti i modelli tranne 521/524	1

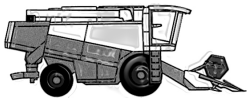

LAVERDA

Trinciapaglia - *Straw Chopper*

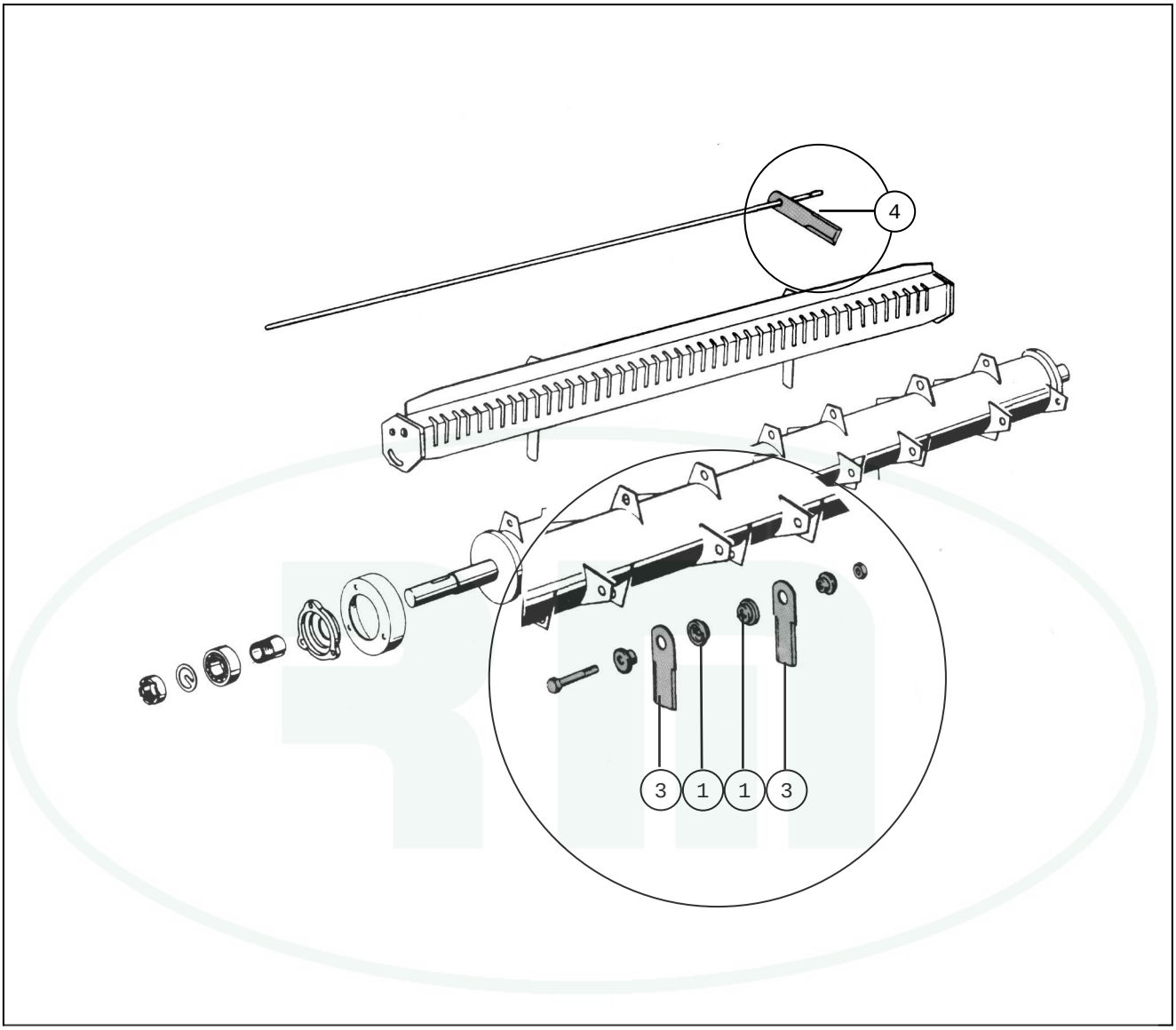

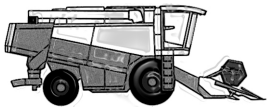

LAVERDA

Pos.	Codice Originale	Codice RIMA	Descrizione Description	Applicazione Application	Conf. Pack.
			TRINCIAPAGLIA *Straw Chopper*		
01		RM39-041	Bushing		50
		RM39-042	Bushing		50
03		RM39-002	Straw chopper blade		20
04	320706150	RM39-020	Counterknife	2009	20
	321723250	RM39-018	Straw chopper blade	2109	20
	322291650	RM39-001	Counterknife		20
	322291650/D	RM39-008	Counterknife		20

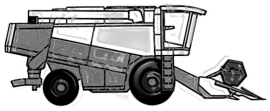

LAVERDA

Pos.	Codice Originale	Codice RIMA	Descrizione Description	Applicazione Application	Conf. Pack.
			VARIE *Various*		
	301613600	**RM22-041**	**Ball joint**		**1**
	301614600	**RM22-042**	**Ball joint**		**1**
	301615300	**RM22-059**	**Ball joint**		**1**
	311975900	**RM22-043**	**Ball joint**		**1**
	311975901	**RM22-044**	**Ball joint**		**1**
	320854150	**RM22-066**	**Silentblock**	301525750	**1**
	320964050	**RM22-111**	**Clutch disc**	311007850	**1**
	320964150	**RM22-113**	**Clutch disc**	301848250/320537850	**1**
	320964550	**RM22-114**	**Clutch disc**	300114386/320515750	**1**
	320965550	**RM22-115**	**Brake support**	300018384	**1**
	321053800	**RM22-048**	**Ball joint**		**1**
	321053900	**RM22-049**	**Ball joint**		**1**
	321054200	**RM22-336**	**Ball joint**		**1**
	321054300	**RM22-337**	**Ball joint**		**1**
	321729750	**RM22-112**	**Clutch disc**	301525750	**1**
	340449005	**RM22-038**	**Silentblock**	SBL034	**1**
	340449006	**RM22-039**	**Silentblock**	SBL041	**1**
	340449017	**RM22-040**		SBL010	**1**

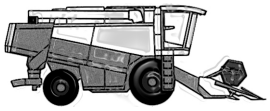

LAVERDA

Pos.	Codice Originale	Codice RIMA	Descrizione Description	Applicazione Application	Conf. Pack.
			CINGHIE *Belts*		
	340432042		**Belt**		**1**
	340432232		**Belt**	3200 M100 M120	**1**
	340432239		**Belt**	M100 M100 AL	**1**
	340432243		**Belt**	3350 (EX M 112) 3450 (EX M132) 3600 3700	**1**
	340432244		**Belt**	3350 AL (EX M 112) 3450 (EX M132) M100	**1**
	340432246		**Belt**	3790 3850 3890 M100	**1**
	340432250		**Belt**	M120	**1**
	340432433		**Belt**	3650 3750 3790 M120 M150 M152	**1**
	340432436		**Belt**	M120	**1**
	340432437		**Belt**	M100 M120	**1**
	340432438		**Belt**	M100 M100 AL	**1**
	340433038		**Belt**	3900	**1**
	340433125		**Belt**	MX 300	**1**
	340433128		**Belt**	M150 M152	**1**
	340433129		**Belt**	3500 3550 AL 3600 3650 3700 3750 3790 385	**1**
	340433131		**Belt**	L517 L521 L524 L624 L626 M84	**1**
	340433133		**Belt**	M150 M152	**1**
	340433134		**Belt**	3350 (EX M 112) 3350 AL (EX M 112) 3450 (	**1**
	340433138		**Belt**	3600 3650 3750 3850	**1**
	340433143		**Belt**	3900 M150 M152	**1**
	340433144		**Belt**	3700 3790	**1**
	340433145		**Belt**	M84	**1**
	340433149		**Belt**	3890	**1**
	340433151		**Belt**	L521 L524 L624 L626	**1**
	340433152		**Belt**	L521 L524	**1**
	340433157		**Belt**	M150	**1**
	340433159		**Belt**	L517 L521 L524 L624 L626	**1**
	340433162		**Belt**	3350 (EX M 112) 3350 AL (EX M 112) 3450 (	**1**
	340433163		**Belt**	M90	**1**
	340433166		**Belt**		**1**
	340433176		**Belt**	3300 3300 AL M90	**1**
	340433181		**Belt**	3550 AL L517 L521 L624 L626	**1**
	340433182		**Belt**	3350 (EX M 112) 3350 AL (EX M 112) 3450 (	**1**
	340433183		**Belt**	MX 300	**1**
	340433184		**Belt**	3500 3700 M150 M152	**1**
	340433185		**Belt**	M84	**1**
	340433188		**Belt**	3300 3300 AL	**1**
	340433189		**Belt**	3600	**1**
	340433190		**Belt**	3650 3750 3850 3890	**1**

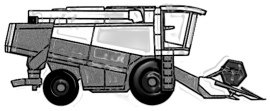

LAVERDA

Pos.	Codice Originale	Codice RIMA	Descrizione Description	Applicazione Application	Conf. Pack.
	340433191		**Belt**	3500 3550 AL	**1**
	340433192		**Belt**	3790	**1**
	340433223		**Belt**	3300 M84	**1**
	340433233		**Belt**	M90	**1**
	340433236		**Belt**	3350 (EX M 112) 3350 AL (EX M 112) 3450 (	**1**
	340433239		**Belt**	3300 AL	**1**
	340433241		**Belt**	M90	**1**
	340433243		**Belt**	3890	**1**
	340433244		**Belt**	3350 (EX M 112)	**1**
	340433250		**Belt**	3550 AL 3650 3750	**1**
	340433252		**Belt**	3200 3300 AL	**1**
	340433256		**Belt**	3900	**1**
	340433257		**Belt**		**1**
	340433259		**Belt**	L521 L524 L624	**1**
	340433260		**Belt**	L517	**1**
	340433262		**Belt**	L521 L524 L624 L626	**1**
	340433266		**Belt**	M84	**1**
	340433269		**Belt**	MX 300	**1**
	340433270		**Belt**	L517 L521 L524 L624 L626	**1**
	340433271		**Belt**	M84	**1**
	340433272		**Belt**	M90	**1**
	340433274		**Belt**	M84	**1**
	340433281		**Belt**	M150 M152 M84 M90	**1**
	340433283		**Belt**	3300 3300 AL	**1**
	340433284		**Belt**	M84	**1**
	340433285		**Belt**	MX 300	**1**
	340433289		**Belt**	3350 (EX M 112) 3350 AL (EX M 112) 3450 (	**1**
	340433290		**Belt**	3200 M100	**1**
	340433308		**Belt**	M100 M100 AL	**1**
	340433311		**Belt**	MX 300	**1**
	340433316		**Belt**	3350 (EX M 112) 3450 (EX M132) 3500 3550	**1**
	340433318		**Belt**		**1**
	340433357		**Belt**	M112	**1**
	340433405		**Belt**	L517 L521 L524 L624 L626	**1**
	340433406		**Belt**	M150 M152	**1**
	340433409		**Belt**	3350 (EX M 112) 3350 AL (EX M 112) 3450 (	**1**
	340433410		**Belt**	3350 (EX M 112) 3350 AL (EX M 112) 3450 (	**1**
	340433411		**Belt**		**1**
	340433412		**Belt**	3200 3300 3300 AL	**1**
	340433413		**Belt**	M150 M152	**1**
	340433414		**Belt**	M100 M84	**1**

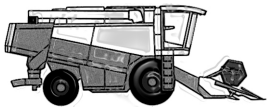

LAVERDA

Pos.	Codice Originale	Codice RIMA	Descrizione Description	Applicazione Application	Conf. Pack.
	340433415		**Belt**	M90	**1**
	340433417		**Belt**	3350 (EX M 112) 3350 AL (EX M 112) 3450 (	**1**
	340433418		**Belt**	3350 (EX M 112) 3450 (EX M132) 3500 3550	**1**
	340433419		**Belt**	M100 M84	**1**
	340433422		**Belt**	3500 3650 3750 3790 3850 3890 L517 L521 L	**1**
	340433424		**Belt**	3600 3700 3900	**1**
	340433425		**Belt**	M90	**1**
	340433427		**Belt**	M100 M100 AL M84	**1**
	340433428		**Belt**	3200	**1**
	340433430		**Belt**	3350 (EX M 112) 3350 AL (EX M 112) 3450 (	**1**
	340433431		**Belt**	M150 M152	**1**
	340433432		**Belt**	3300 3300 AL	**1**
	340433433		**Belt**	M90	**1**
	340433435		**Belt**	3350 (EX M 112) 3450 (EX M132) M112 M12	**1**
	340433440		**Belt**	M100 M100 AL M120 M150 M152 M84	**1**
	340433441		**Belt**	M100 M100 AL M84 M90	**1**
	340433442		**Belt**	M150 M152	**1**
	340433446		**Belt**	3500 3550 AL	**1**
	340433450		**Belt**		**1**
	340433453		**Belt**	M90	**1**
	340433455		**Belt**	3350 (EX M 112) 3350 AL (EX M 112) 3450 (	**1**
	340433456		**Belt**	3350 (EX M 112) 3350 AL (EX M 112) 3450 (	**1**
	340433457		**Belt**	3650 3750 3790 3850 3890 3900	**1**
	340433458		**Belt**	3200 3300 3300 AL 3600 3700	**1**
	340433465		**Belt**	3500 3550 AL	**1**
	340433467		**Belt**	3600 3650 3700 3750 3790 3850 3890	**1**
	340433469		**Belt**	3500 3550 AL	**1**
	340433470		**Belt**	M100	**1**
	340433471		**Belt**	MX 300	**1**
	340433472		**Belt**	3500 3550 AL	**1**
	340433473		**Belt**	3500 3550 AL	**1**
	340433474		**Belt**	L517 L521 L524 L624 L626	**1**
	340433475		**Belt**	L517 L521 L524 L624 L626	**1**
	340433531		**Belt**	3350 (EX M 112) 3350 AL (EX M 112) 3450 (	**1**
	340433532		**Belt**		**1**
	340433537		**Belt**	3350 (EX M 112) 3350 AL (EX M 112) 3450 (	**1**
	340433539		**Belt**	3500 3550 AL 3650 3750 3790 3850 3890 L51	**1**
	340433540		**Belt**	3600 3700 3900	**1**
	340433926		**Belt**	M90	**1**
	340433961		**Belt**	M90	**1**
	340433963		**Belt**	M100 M100 AL	**1**

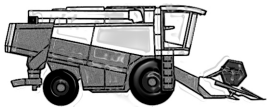

LAVERDA

Pos.	Codice Originale	Codice RIMA	Descrizione Description	Applicazione Application	Conf. Pack.
	340433968		**Belt**	3200 M90	**1**
	340433970		**Belt**	3300 3300 AL M84	**1**
	340433980		**Belt**	3300	**1**
	340433983		**Belt**	3500 3550 AL 3650 3750 3790 3850 3890	**1**
	340433984		**Belt**	L517 L521 L524 L624 L626	**1**
	340434138		**Belt**	3350 (EX M 112) 3450 (EX M132) 3500 3550	**1**
	340434140		**Belt**	3350 (EX M 112) 3350 AL (EX M 112) 3450 (	**1**
	340434245		**Belt**	M100 M100 AL	**1**
	340434247		**Belt**	M90	**1**
	340434250		**Belt**	M120	**1**
	340435100		**Belt**	M90	**1**
	340435117		**Belt**	M120	**1**
	340435120		**Belt**	3300 M84	**1**
	340435124		**Belt**	3700 3790 3850 3890 3900 L624 L626	**1**
	340435125		**Belt**	3450 (EX M132) M132 M150 M152	**1**
	340435127		**Belt**	3350 (EX M 112) 3450 (EX M132) M100 M10	**1**
	340435130		**Belt**	3500 3600 3700	**1**
	340435131		**Belt**	3650 3750 3850	**1**
	340435135		**Belt**	M100 M84	**1**
	340435138		**Belt**	3200 3300 3300 AL M100 M100 AL M84	**1**
	340435146		**Belt**	3350 AL (EX M 112) M112 M112 AL	**1**
	340435147		**Belt**	3500 3550 AL	**1**
	340435148		**Belt**		**1**
	340435149		**Belt**	3500 3550 AL	**1**
	340435150		**Belt**	3650 3750 3790 3850 3890 L517 L521 L524 L	**1**
	340435151		**Belt**		**1**
	340435152		**Belt**	3600 3650 3750 L517 L521 L524	**1**
	340435153		**Belt**	L517 L521 L524 L624 L626	**1**
	344310113		**Belt**	MX 300	**1**
	344310222		**Belt**	3200	**1**
	344310226		**Belt**		**1**
	344310237		**Belt**	MX 300	**1**
	344311113		**Belt**	MX 300	**1**
	344311117		**Belt**	MX 300	**1**
	344311120		**Belt**		**1**
	344311123		**Belt**	L517 L521 L524 L624 L626	**1**
	344311126		**Belt**	3500 3550 AL	**1**
	344311127		**Belt**	3600 3650 3700 3750 3790 L517 L521 L524 L	**1**
	344311130		**Belt**	L517 L521 L524 L624 L626	**1**
	344311134		**Belt**	3600 3650 3700 3750 3790 3850 3890 3900	**1**
	344311137		**Belt**	3650 3750 3790 3850 3890 MX 300	**1**

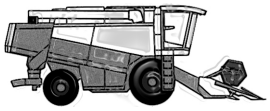

LAVERDA

Pos.	Codice Originale	Codice RIMA	Descrizione Description	Applicazione Application	Conf. Pack.
	344311151		**Belt**	L517 L521 L524 L624 L626	**1**
	344311212		**Belt**	3300 AL 3350 AL (EX M 112) M112 AL	**1**
	344311217		**Belt**	3300 3300 AL 3500 3600 3700	**1**
	344311218		**Belt**	M84	**1**
	344311220		**Belt**	3200	**1**
	344311221		**Belt**	3350 (EX M 112) 3350 AL (EX M 112) 3450 (	**1**
	344311222		**Belt**	3350 (EX M 112)	**1**
	344311226		**Belt**	3550 AL 3750 3790 3890	**1**
	344311227		**Belt**	L521 L524 L624 L626 MX 300	**1**
	344311228		**Belt**	L517	**1**
	344311310		**Belt**		**1**
	344311314		**Belt**	3900	**1**
	344311315		**Belt**	M150 M152	**1**
	344311316		**Belt**	3450 (EX M132)	**1**
	344311318		**Belt**	3500 3550 AL 3600 3650 3700 3750 3790 385	**1**
	344311319		**Belt**	MX 300	**1**
	344311418		**Belt**	3900	**1**
	344312127		**Belt**	3850 3890	**1**
	344351146		**Belt**	3450 (EX M132)	**1**
	4624737		**Belt**		**1**
	4688854		**Belt**		**1**
	4796327		**Belt**		**1**
	8822704		**Belt**	M150	**1**

BISO-SCHRATTENECKER

Barra di Taglio - *Cutting Bar*

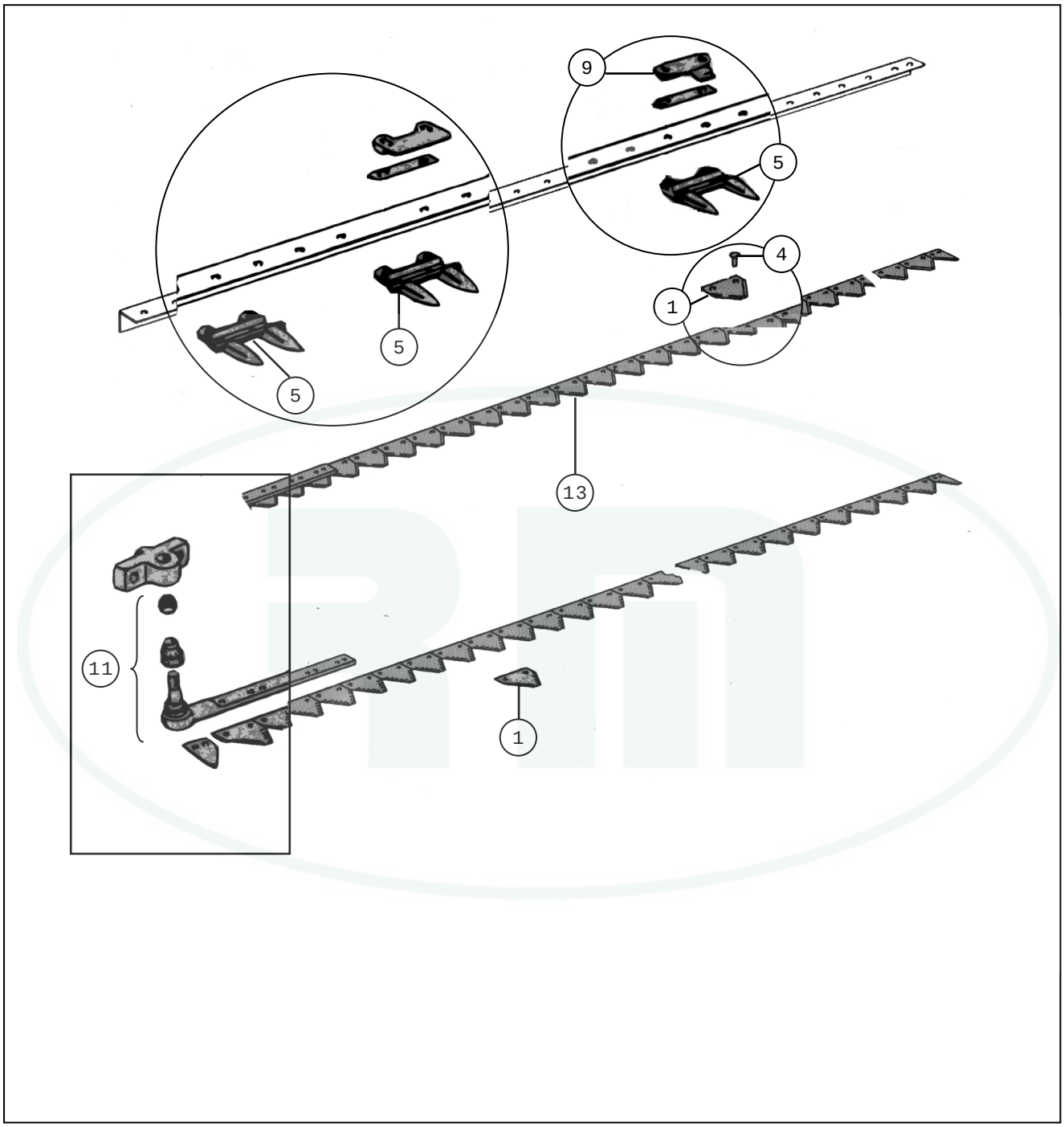

US = rigata sotto
TS = rigata sopra

TTQST = testa tonda quadro sotto t.
TT = testa tonda
TPSV = testa piana svasata

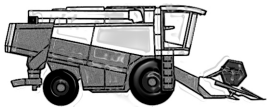

BISO-SCHRATTENECKER

Pos.	Codice Originale	Codice RIMA	Descrizione Description	Applicazione Application	Conf. Pack.
			BARRA DI TAGLIO *Cutterbar*		
01	300B03	RM01-001	Knife section		25
	801A10	RM01-023	Knife section	580300401	25
04	300B06	RM01-014	Rivet		2
	300B07	RM01-015	Rivet		2
05	105F00	RM01-002	Double finger		1
09	300C01	RM01-005	Knife clip	300019116	10
11		RM01-006	Wearing plate	3000112140	1
		RM01-022	Knife head	321219951	1
		RM01-025	Knife head	84433779/13	1
		RM01-026	Knife head	84433779/16	1
	100B11	RM01-024	Ball joint	311441000	1
	300B01	RM01-003	Knife head	80753862	1
	300B02	RM01-004	Head plate	311458662	1
13	300A103	RM01-013	Complete knife		1
	300A55	RM01-007	Complete knife		1
	300A63	RM01-008	Complete knife		1
	300A70	RM01-009	Complete knife		1
	300A75	RM01-010	Complete knife		1
	300A83	RM01-011	Complete knife		1
	300A90	RM01-012	Complete knife		1
	801A09	RM01-027	Complete knife		1

BISO-SCHRATTENECKER

Comando Lama - *Gearbox*

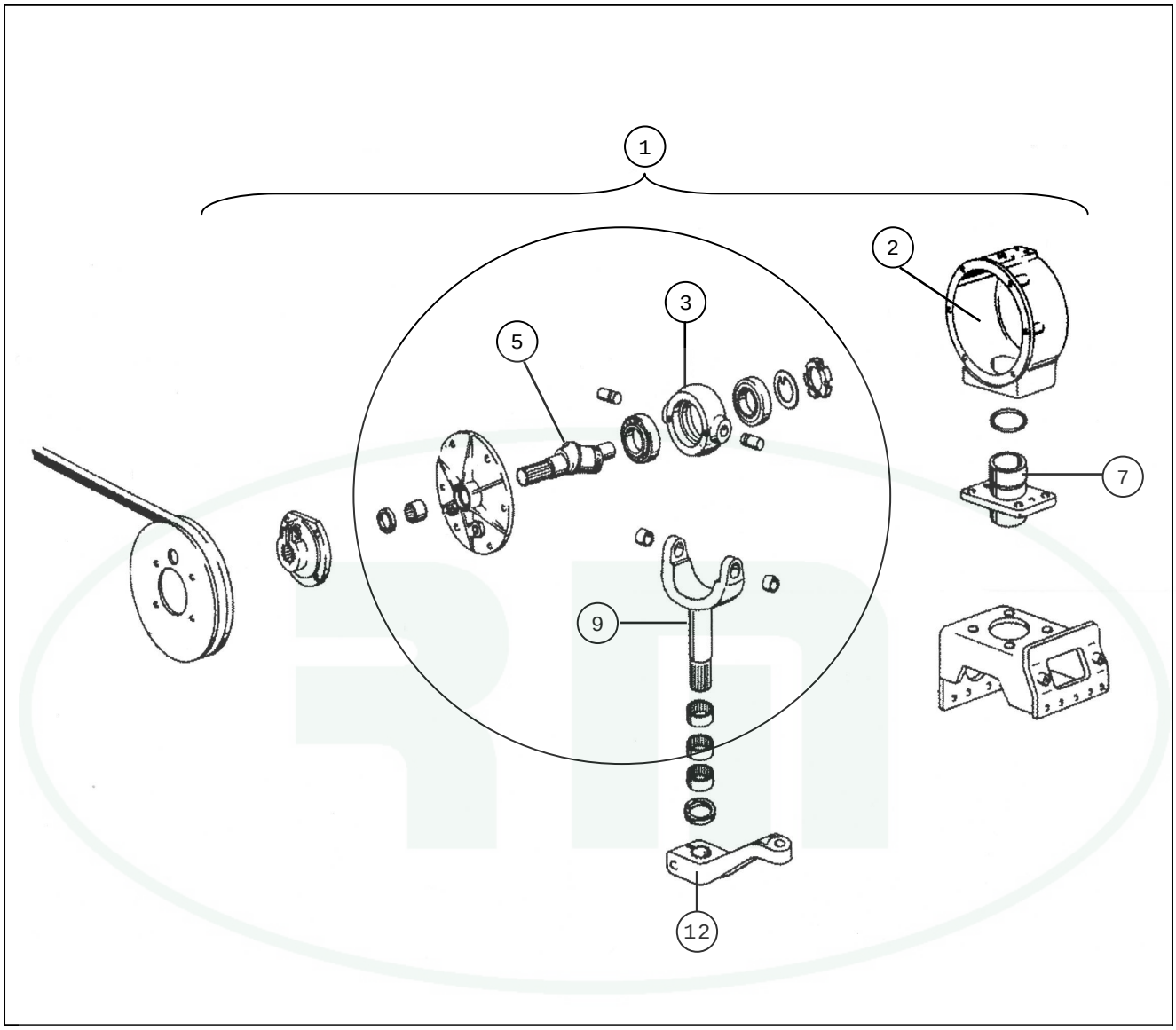

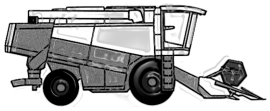

BISO-SCHRATTENECKER

Pos.	Codice Originale	Codice RIMA	Descrizione Description	Applicazione Application	Conf. Pack.
			COMANDO LAMA *Gearbox*		
00	100012	RM01-031	Washer	355547110	1
	100B02	RM01-032	Washer	350354530	1
	100B03	RM01-033	Nut	12166711	1
	100B04	RM01-034	Screw	11422021	2
	100B07	RM01-037	Washer	355534350	5
	100B08	RM01-038	Nut	10726711	1
	100B09	RM01-039	Key	350383738	1
	100B10	RM01-040	Key	350382019	1
	100B12	RM01-041	Box	300114361	1
	100C01	RM01-042	Gasket	321742550	5
	100C02	RM01-043	Nut	10793511	1
	100C05	RM01-046	Bearing	20996680	1
	100C06	RM01-047	Bearing	24903820	1
	100C08	RM01-048	Needle socket	340445124	1
	100C11	RM01-050	Bearing	20705250	1
	100C13	RM01-051	Safety ring	350358312	1
	100C14	RM01-052	Plug	303264100	1
	100C15	RM01-053	Oil lavel plug	350359405	1
	100C16	RM01-054	Washer	300114622	1
	100C18	RM01-055	Bushing	300037722	1
	100C19	RM01-056	Ring	300114898	1
	100C20	RM01-057	Spacer bushing	300114653	1
	100C22	RM01-058	Gasket	353583192	1
	100C23	RM01-059	O-Ring	14465080	1
	100C24	RM01-060	Washer	355561030	1
	100D02	RM01-018	Gear box cover	300114362	1
	10SK20	RM01-065	Pulley	321204050	1
	10SK22	RM01-066	Tension Pulley	300015677	1
01	100A01	RM01-028	Gearbox	311436100	1
02	100D01	RM01-016	Gear box case	300114361	1
03	100C07	RM01-021	Eccentric bedding	300114369	1
05	100C10	RM01-020	Eccentric spindle	300114618	1
07	100D03	RM01-019	Bearing flange	300114363	1
09	100C17	RM01-030	Rocker shaft	322031850	1
12	100B01	RM01-031	Ball joint	311441000	1

DEUTZ-FAHR

Barra di Taglio - *Cutting Bar*

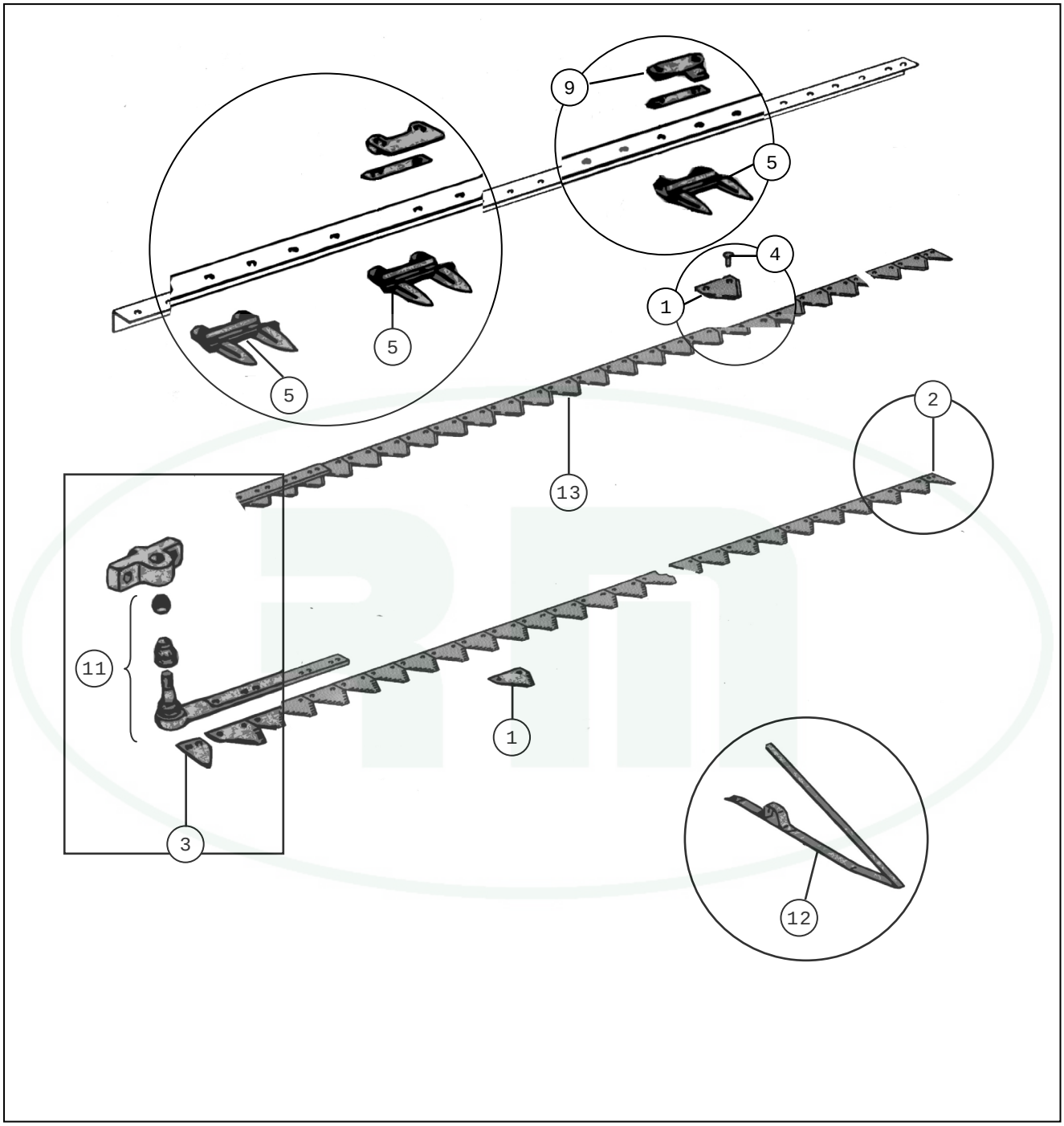

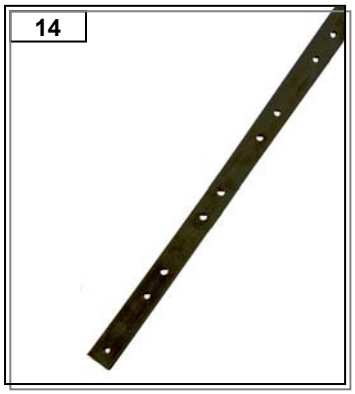

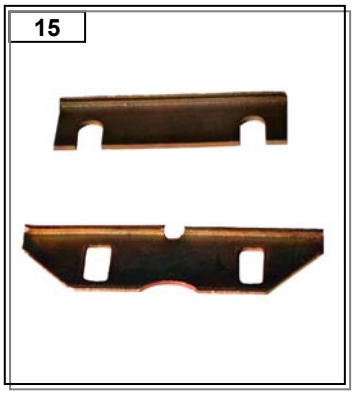

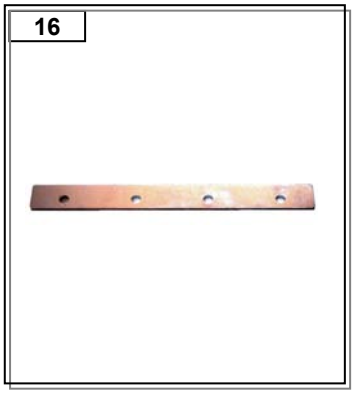

US = rigata sotto
TS = rigata sopra

TTQST = testa tonda quadro sotto t.
TT = testa tonda
TPSV = testa piana svasata

Pos.	Codice Originale	Codice RIMA	Descrizione Description	Applicazione Application	Conf. Pack.
			BARRA DI TAGLIO *Cutterbar*		
01	0622.7771	RM12-021	Knife section	1001200018420- 2,0mm	25
	0622.7771/A	RM12-022	Knife section	1001200018420- 2,7mm.	25
	0650.3530	RM12-049	Knife section	1600.7763-420100045	25
	0650.3530/A	RM12-030	Knife section		25
02	0650.3569	RM12-032	Half section		25
03	0623.2955	RM12-003	Plate	1110406014800	5
04	0622.7724	RM12-127	Rivet	5,3x16	2
	1600.6819	RM12-050	Bolt	Bullone 420.100.012 - dado 0111.4357- 6 x 16	100
05	0623.6756	RM12-004	Double finger	1.1113.060.236.00 fino anno costr. 1983	1
	0650.3514	RM12-033	Double finger	410.100.001	1
	0650.3598	RM12-095	Double finger	410.100.009	1
	1600.6625	RM12-094	Double finger	410.100.003	1
	1604.4988	RM12-048	Double finger	1600.7093 - 410.300.041	1
09	0623.9588	RM12-063	Knife clip		10
	1402	RM1402	Knife clip - RM knives		10
11	0623.2941	RM12-002	Knife head	1.1104.06.010.00	1
	0623.7347	RM12-001	Knife head	1.1114.060.007.00=0651.6242- vecchio tipo fi	1
	0650.3531	RM12-145	Knife head	420.201.303- per sistema SCH fino a 6,6m	1
	0650.3571	RM12-098	Knife head	420.010.102	1
	1600.6818	RM12-096	Knife head	420.258.301	1
	1600.7576	RM12-347	Plastic bushing	SCH	1
	1601.5329	RM12-097	Knife head	420.301.301- per sistema SCH fino a 7,2m	1
12	0650.8131	RM12-312	Holder	250.350.000	1
	0651.3518	RM12-103	Crop lifter	UK300, 131.500.113	1
	0652.3364	RM12-104	Crop lifter	AS100- 111.500.113	1
	0654.2637	RM12-106	Crop lifter	AS112- 111.512.112	1
	0654.2638	RM12-107	Crop lifter	UK312- 131.512.112	1
13	0624.2353	RM12-122	Complete knife		1
	0630.3094	RM12-017	Complete knife	1.1106.061.804.00- tipo vecchio	1
	0630.3095	RM12-018	Complete knife	1.1110.060.806.00- tipo vecchio	1
	0630.3236	RM12-020	Complete knife	1.1110.061.805.00- tipo vecchio	1
	0630.8757	RM12-016	Complete knife	1.1106.060.806.00- tipo vecchio	1
	0630.8792	RM12-019	Complete knife	1.1106.064.804.00- tipo vecchio	1
	0631.0685	RM12-010	Complete knife	1.1114.061.590.00-mod.M900-M1602 fino a 8	1
	0631.0722	RM12-011	Complete knife	1.1114.062.580.00-mod.M900-M1602 fino a 8	1
	0631.0751	RM12-012	Complete knife	1.1114.063.580.00-mod.M900-M1602 fino a 8	1

Pos.	Codice Originale	Codice RIMA	Descrizione Description	Applicazione Application	Conf. Pack.
13	0633.0965	RM12-014	Complete knife	1.2106.065.580.00-mod.M900-M1602 fino a 8	1
	0633.1580	RM12-015	Complete knife	1.2107.066.580.00-mod.M900-M1602 fino a 8	1
	0650.3520/V	RM12-041	Knife back	1600.7251-422.001.270 SCH dopo 84	1
	0650.3521/V	RM12-042	Complete knife	1600.7253-422.001.300 SCH dopo 84	1
	0650.3522/V	RM12-043	Complete knife	1600.7254-422.001.360 SCH dopo 84	1
	0650.3523/V	RM12-044	Complete knife	1600.7255-422.001.420 SCH dopo 84	1
	0650.3524/V	RM12-045	Complete knife	1600.7256-422.001.480 SCH dopo 84	1
	0650.3525/V	RM12-046	Complete knife	422.001.560 SCH dopo 84	1
	0650.3526/V	RM12-047	Complete knife	422.001.710 SCH dopo 84	1
	0650.3583/V	RM12-034	Complete knife	422.010.225 SCH dopo 84 scatola obliqua	1
	0650.3584/V	RM12-035	Complete knife	422.010.255 SCH dopo 84 scatola obliqua	1
	0650.3585/V	RM12-036	Complete knife	422.010.270 SCH dopo 84 scatola obliqua	1
	0650.3586/V	RM12-037	Complete knife	442.010.300 SCH dopo 84 scatola obliqua	1
	0650.6764/V	RM12-123	Complete knife	422.001.540 SCH dopo 84	1
	0650.6765/V	RM12-124	Complete knife	1602.6265-422.001.600 SCH dopo 84	1
	0650.6851	RM12-013	Complete knife	1.2106.064.580.00-mod.M900-M1602 fino a 8	1
	0653.4580/V	RM12-125	Complete knife	1602.6266-422.001.660 SCH dopo 84	1
	0653.6766/V	RM12-126	Complete knife	1602.6267-422.001.720 SCH dopo 84	1
14		RM12-111	Knife back	Sistema Schumacher	1
		RM12-112	Knife back	Sistema Schumacher	1
		RM12-113	Knife back	Sistema Schumacher	1
		RM12-115	Knife back	Sistema Schumacher	1
		RM12-116	Knife back	Sistema Schumacher	1
		RM12-117	Knife back	Sistema Schumacher	1
		RM12-118	Knife back	Sistema Schumacher	1
		RM12-119	Knife back	Sistema Schumacher	1
		RM12-120	Knife back	Sistema Schumacher	1
		RM12-121	Knife back	Sistema Schumacher	1
	0623.7382	RM12-005	Knife back	1111406111300	1
	0624.2343	RM12-110	Knife back		1
	0631.0696	RM12-006	Knife back	1111406111100	1
	0631.0730	RM12-007	Knife back	1111406310500	1
	0633.0940	RM12-009	Knife back	1210606511800	1
	0633.1563	RM12-066	Knife back		1
	0650.6730	RM12-008	Knife back	1114066412600	1
	0654.6839	RM12-114	Knife back	Sistema Schumacher	1
15	0623.1899	RM12-067	Wearing plate		10
	0623.5932	RM12-023	Wearing plate	1.1110.060.161.00-0650.6395	10
16	0650.3516	RM12-079	Guide	410.400.005	1
	0650.3517	RM12-129	Spacer	410.004.202	1

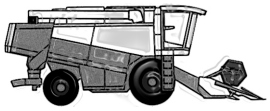

DEUTZ-FAHR

Pos.	Codice Originale	Codice RIMA	Descrizione Description	Applicazione Application	Conf. Pack.
16	0650.3570	RM12-099	Guide	410.400.005	1
	0650.3575	RM12-108	Support	420.010.103	1
	0650.3576	RM12-038	Guide	410.010.101	1
	0650.3577	RM12-039	Guide	420.510.001	1
	0650.3579	RM12-040	Guide	410.510.002	1
	0650.3581	RM12-100	Guide	410.402.005	1
	0650.3600	RM12-101	Guide	410.403.005	1

DEUTZ-FAHR

Comando Lama - *Gearbox*

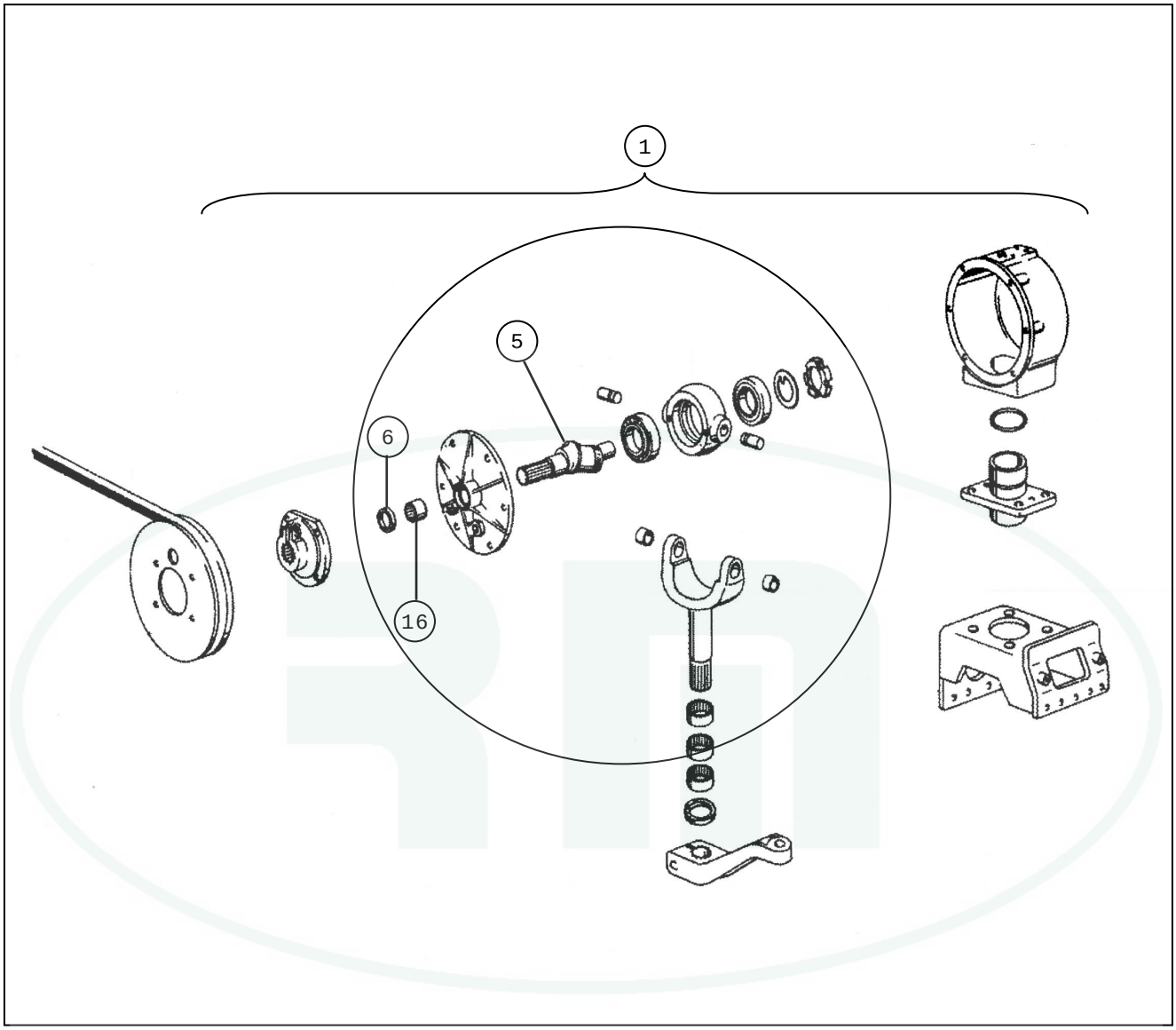

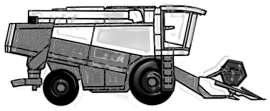

DEUTZ-FAHR

Pos.	Codice Originale	Codice RIMA	Descrizione Description	Applicazione Application	Conf. Pack.
			COMANDO LAMA *Gearbox*		
	0623.7357	RM12-329	Plate		1
	0650.8120	RM12-062	Bearing support	M900-M1602	1
	0650.9007	RM12-061	Rotor	M900-M1602	1
01	0651.0596	RM12-081	Knifedrive	M900-M1602	1
	1600.7091	RM12-091	Knifedrive		1
05	0650.6893	RM12-077	Rotor	M900-M1602/ 1.1114.060.140.00	1
16	0623.7350	RM12-076	Sprocket		1

DEUTZ-FAHR

Coclea - *Auger*

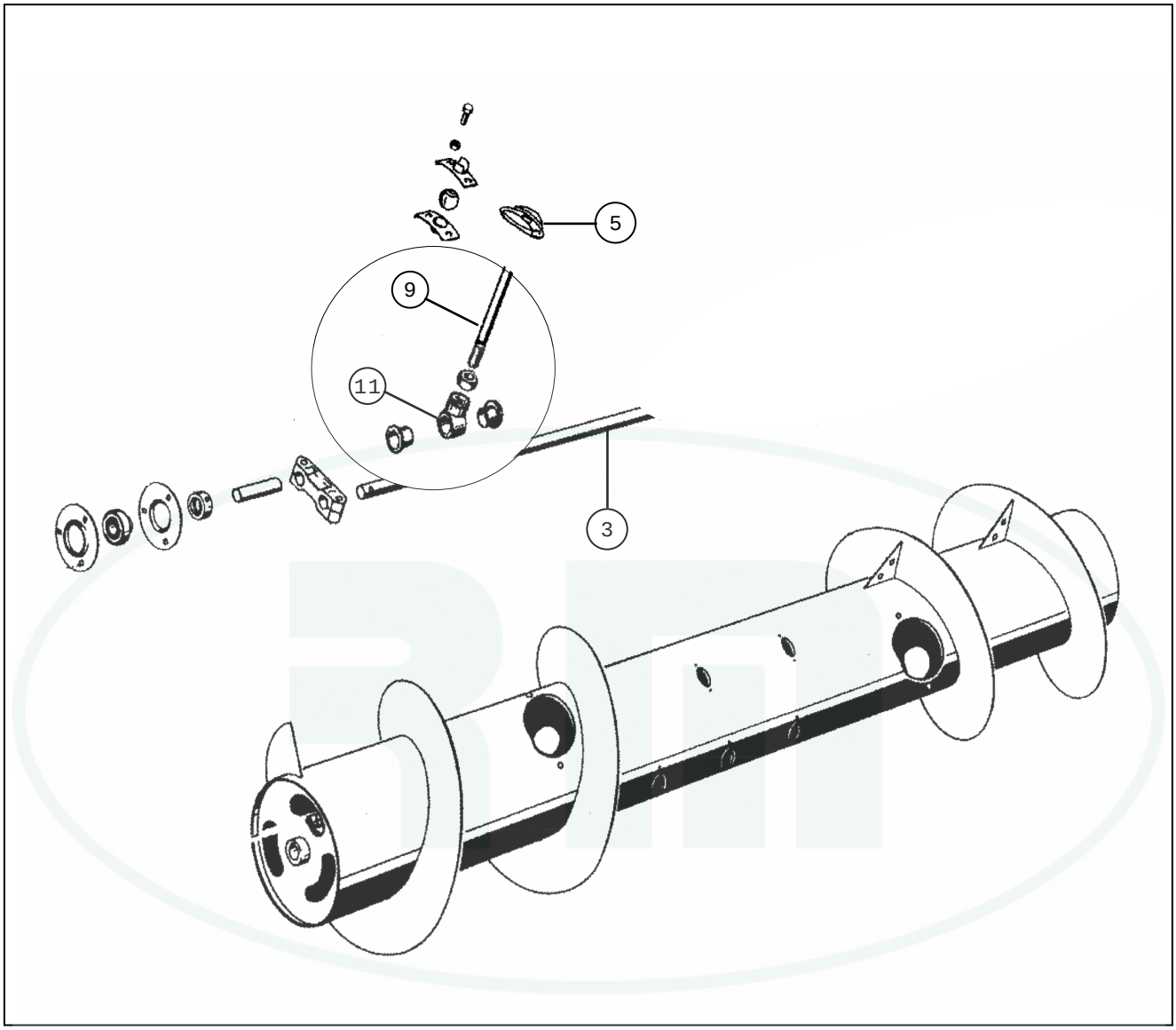

Aspo – *Reel Tines*

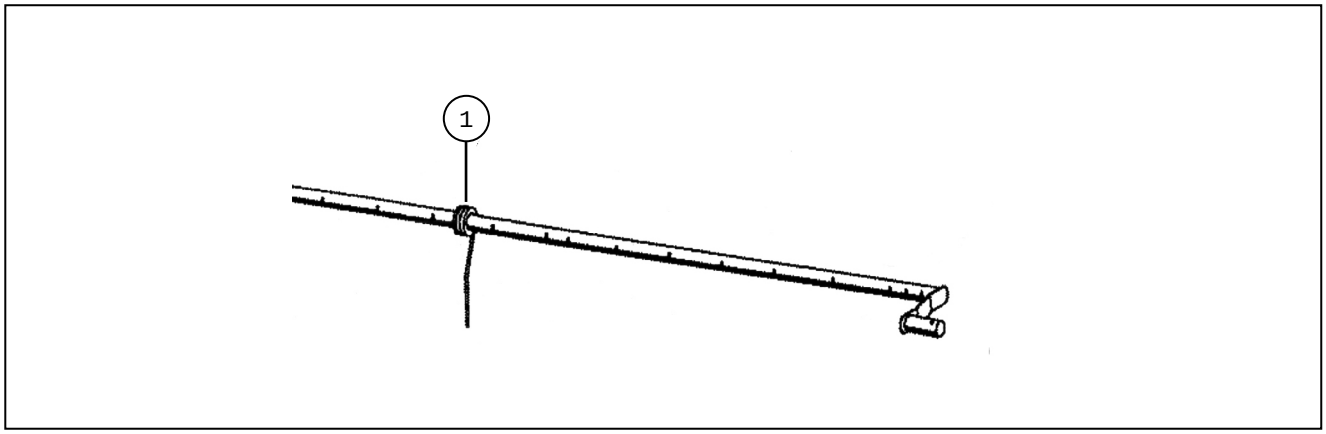

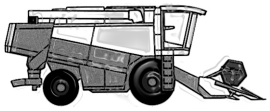

DEUTZ-FAHR

Pos.	Codice Originale	Codice RIMA	Descrizione Description	Applicazione Application	Conf. Pack.
			COCLEA *Auger*		
	0114.5472	**RM12-059**	**Pin**	Topliner	**1**
	0624.2177	**RM12-147**	**Screw**		**1**
	0654.6669	**RM12-060**	**Lining**		**1**
03	**0624.2301**	**RM12-332**	**Shaft**		**1**
	0653.4550	**RM12-331**	**Shaft**		**1**
05	**1602.4716**	**RM12-027**	**Finger guide**	0624.2175/1.1123.061.132.00	**25**
09	**0624.2176/a**	**RM12-146**	**Retractable finger - RM modification**	diam. 16mm	**10**
	0651.1190	**RM12-025**	**Retractable finger**	0624.2176/0628.7883 Tipo vecchio	**10**
	1604.8570	**RM12-148**	**Retractable finger**	16x230mm - Topliner / 1601.9681	**10**
11	**0621.5711**	**RM12-078**	**Inner bushing**		**1**
	0623.7391	**RM12-028**	**T bushing**		**20**
	0623.7391/A	**RM12-149**	**T bushing - RM modification**		**20**
	1601.3564	**RM12-031**	**T bushing**	Topliner	**20**
			ASPO *Reel Tines*		
	0624.2405	**RM12-069**	**Bushing**		**1**
	0624.2406	**RM12-070**	**Bushing**		**1**
	0624.2407	**RM12-071**	**Plate**		**1**
	0651.9153	**RM12-086**	**Lining**		**1**
	1600.0834	**RM12-052**	**Supports kit**		**10**
	1600.0913	**RM12-322**	**Supports kit**		**10**
01	**0650.7134**	**RM12-029**	**Reel tine**		**20**
	0654.2373	**RM12-337**	**Reel tine**		**20**
	1600.0929	**RM12-150**	**Reel tine**	Topliner	**20**

Guide Alimentazione – *Conveyor Guides*

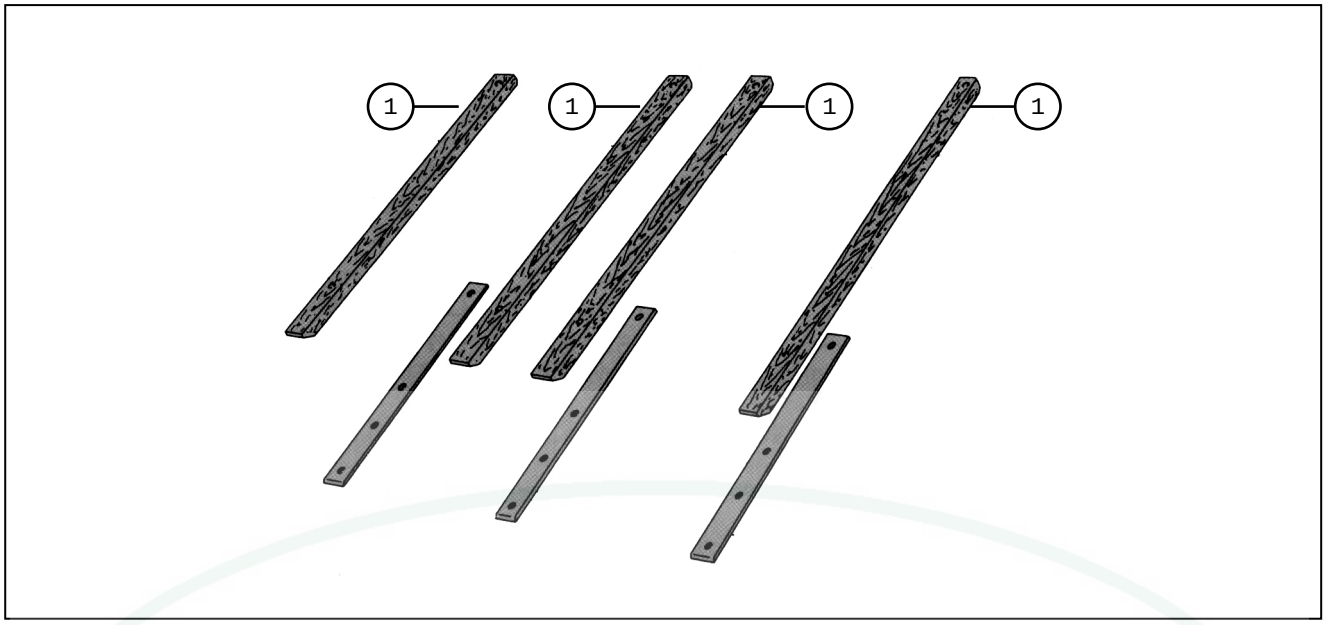

Alimentazione - *Feeder Channel*

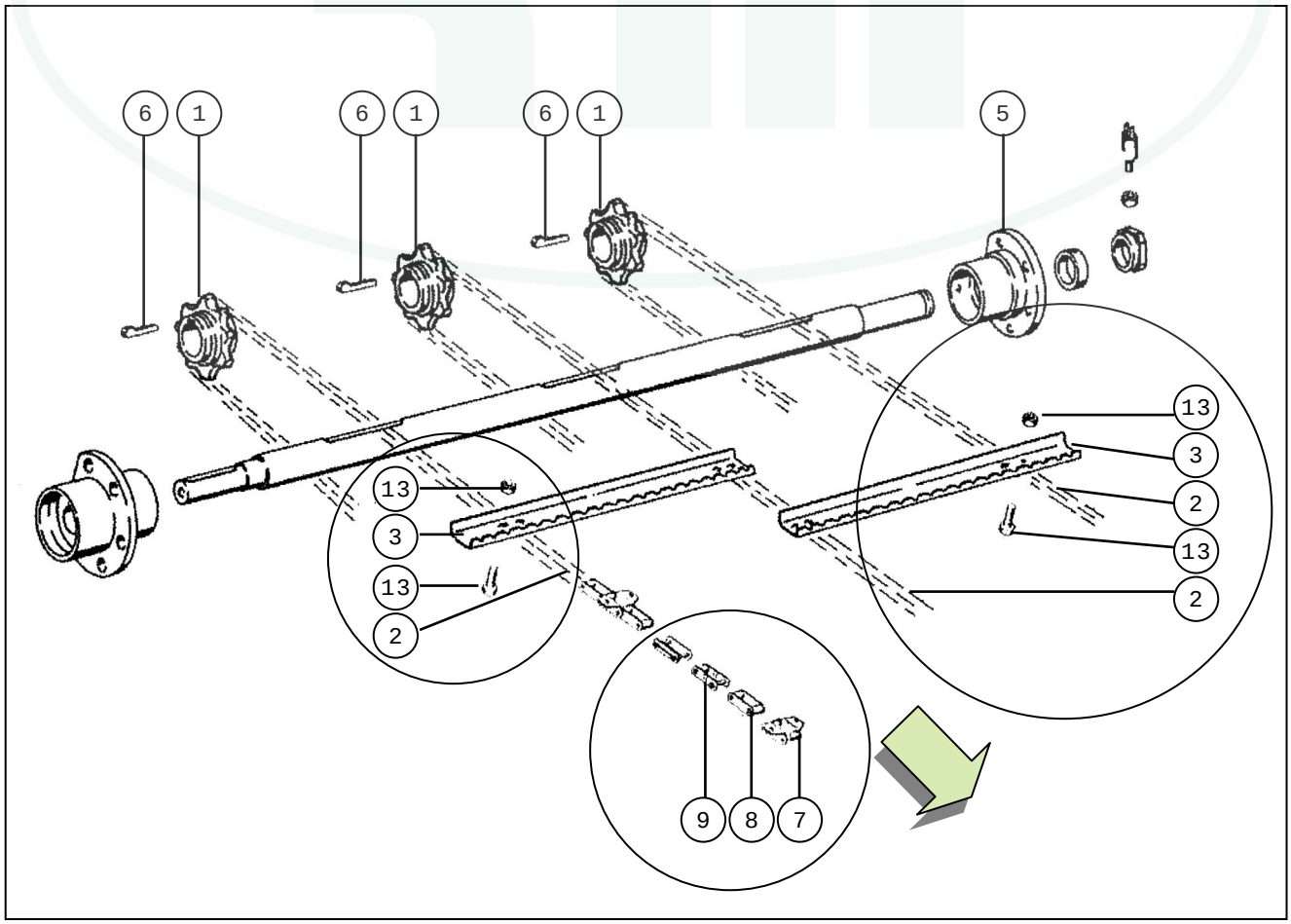

Pos.	Codice Originale	Codice RIMA	Descrizione Description	Applicazione Application	Conf. Pack.
			GUIDE ALIMENTAZIONE *Conveyor Guides*		
01	0654.9757	RM12-231	Wooden guide	1.2106.090 158.00- mod.M1300-1630/35.70-3	1
	1601.5773	RM12-232	Wooden guide	Topliner 4070-4090 da no. 6276	1
			ALIMENTAZIONE *Feeder Channel*		
01	0623.7526	RM12-342	Sprocket		1
	0624.0355	RM12-343	Sprocket		1
	0650.6896	RM12-341	Sprocket		1
	0654.9862	RM12-133	Sprocket	mod. 1102-1322- 2480-2780H/1102-1322-	1
02		RM12-181	Feeder chain	2480-2785H vers. rinf.- 76 maglie - 19 sprangh	1
		RM12-183	Feeder chain	2385- versione rinforzata	1
		RM12-185	Feeder chain - assemblied	2480-2780H- Mais	1
		RM12-192	Feeder chain	M1300-1322- Mais	1
		RM12-193	Feeder chain - assemblied	M1300-1322/35.80- Mais	1
		RM12-196	Feeder chain - assemblied	36.10-36.40 con equilibratura oscillante	1
		RM12-197	Feeder chain - assemblied	M1600-1620/36.30- Mais	1
		RM12-198	Feeder chain	M1600-36.40- Mais	1
		RM12-199	Feeder chain	Topliner4060-4068/4070-80-90- con equilibrat	1
		RM12-200	Feeder chain	Topliner Balance 4070-90- vers. rinf.	1
		RM12-203	Feeder chain - assemblied	Topliner 4070/75/80 fino a 6275- versione lung	1
		RM12-204	Feeder chain - assemblied	Topliner 4070/75/80 da no. 6276- versione lun	1
	0650.0882	RM12-179	Feeder chain - assemblied	M1102-1202 versione rinforzata	1
	0650.4423	RM12-180	Feeder chain	2480-2785H vers. rinf.- 76 maglie- 13 spranghe	1
	0650.6423	RM12-186	Feeder chain	1322- versione rinforzata	1
	0651.1780	RM12-195	Feeder chain - assemblied	mod. 1600-1620/36.10-36.40- vers. rinf.	1
	0651.1782	RM12-187	Feeder chain	M1300-1620/35.10-36.10/M1600-36.40/Starli	1
	0654.7408	RM12-194	Feeder chain - assemblied	1600-1630/3610-3640/Topliner 4060-4068- 40	1
	111160902000	RM12-166	Feeder chain	M1000-1200	1
	111160902020	RM12-168	Feeder chain - assemblied	M1000/1200 versione rinforzata	1
	111160911001	RM12-167	Feeder chain	M1102-1202	1
	111160917301	RM12-169	Feeder chain - assemblied	M1102-1202 versione rinforzata	1
	121060905301	RM12-189	Feeder chain - assemblied	mod. M1322- 35.70-35.80 versione rinforzata	1
	121060905401	RM12-190	Feeder chain - assemblied	M1300-1322/35.80/Starliner 4040/4045- versio	1
	121070905300	RM12-188	Feeder chain	mod. M1300-1322/1600-3610- versione norma	1
	121230905400	RM12-182	Feeder chain	2480-2780 versione normale	1
	121230905401	RM12-184	Feeder chain - assemblied	2480-2780H- versione rinforzata	1
	1600.1076	RM12-191	Feeder chain - assemblied	35.80-Topliner4060-68 fino anno costr. 94	1
	1600.2646	RM12-202	Feeder chain - assemblied	Topliner 4070/75/80 fino a 6275	1
	1601.5520	RM12-201	Feeder chain - assemblied	Topliner 4070/75/80 da no. 6276- 94	1
	1603.9947	RM12-205	Feeder chain	Topliner 4070-4090 da 99 mod. Balance	1
	1603.9949	RM12-206	Feeder chain	Topliner 4070-4090 da 99 mod. Balance	1

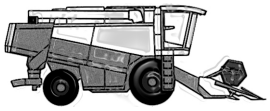

DEUTZ-FAHR

Pos.	Codice Originale	Codice RIMA	Descrizione Description	Applicazione Application	Conf. Pack.
02	1604.6490	RM12-208	Feeder chain	Topliner 4070-4090	1
	1604.6492	RM12-207	Feeder chain	Topliner 4070-4090	1
	1605.2172	RM12-209	Feeder chain - assemblied	Topliner 4070/75/80	1
03	0623.9798	RM12-210	Chain lath	1.1116.090 141.0 - mod. M1000-1200	1
	0650.0863	RM12-212	Chain lath	0626.1174-1.2123.090 115.0 - mod. M2480-27	1
	0650.0878	RM12-213	Chain lath	0628.2412 - mod. M1300-1322/3570-80	1
	0650.0881	RM12-215	Chain lath	0625.6254- mod. 1600-1630/3610-3640	1
	0650.0884	RM12-068	Chain lath	0623.9896 -1.1116.091 222.0 - mod. M1102-1	1
	0654.9355	RM12-218	Chain lath	Starliner 4040/4045/Topliner 4060/65 fino a no	1
	0654.9356	RM12-220	Chain lath	Topliner 4070/75/80 fino a no. 6275	1
	121070903190	RM12-216	Chain lath	M1600-1620/36.10-36.40	1
	1600.7860	RM12-214	Chain lath	0654.9355- mod. M1300-1322/35.80/35.70	1
	1600.7861	RM12-221	Chain lath	Topliner 4070/75/80 fino a no. 6275	1
	1601.3337	RM12-222	Chain lath	Topliner 4070/75/80 fino da no. 6276	1
	1601.5513	RM12-217	Chain lath	Topliner 4060-68- da no. 6276- 95	1
	1601.5513	RM12-219	Chain lath	versione liscia	1
	1604.6528	RM12-223	Chain lath	Topliner4070-4080 dal 1999- versione divisa	1
	1604.6529	RM12-345	Chain lath		1
05	0623.9872	RM12-082	Support unit		1
06		RM12-227	Key		1
07	0624.1062	RM12-234	Chain link	M1000-1610	1
	0627.7423	RM12-237	Chain link	vers. rinf.- mod. M1000-Topliner	1
08	0114.1513	RM12-238	Chain link	vers. rinf.- mod. M1000-Topliner	1
	0628.1491	RM12-235	Chain link	M1000-1610	1
09	0114.1514	RM12-239	Chain link	vers. rinf.- mod. M1000-Topliner	1
	0621.3130	RM12-236	Chain link	M1000-1610	1
13		RM12-224	Bolt	M1000-1002/M900-1080	1
		RM12-225	Bolt	M1300-1322/3570/3580/1600-1630/3610-364	1

Notes

DEUTZ-FAHR

Controbattitore - *Treshing Concave*

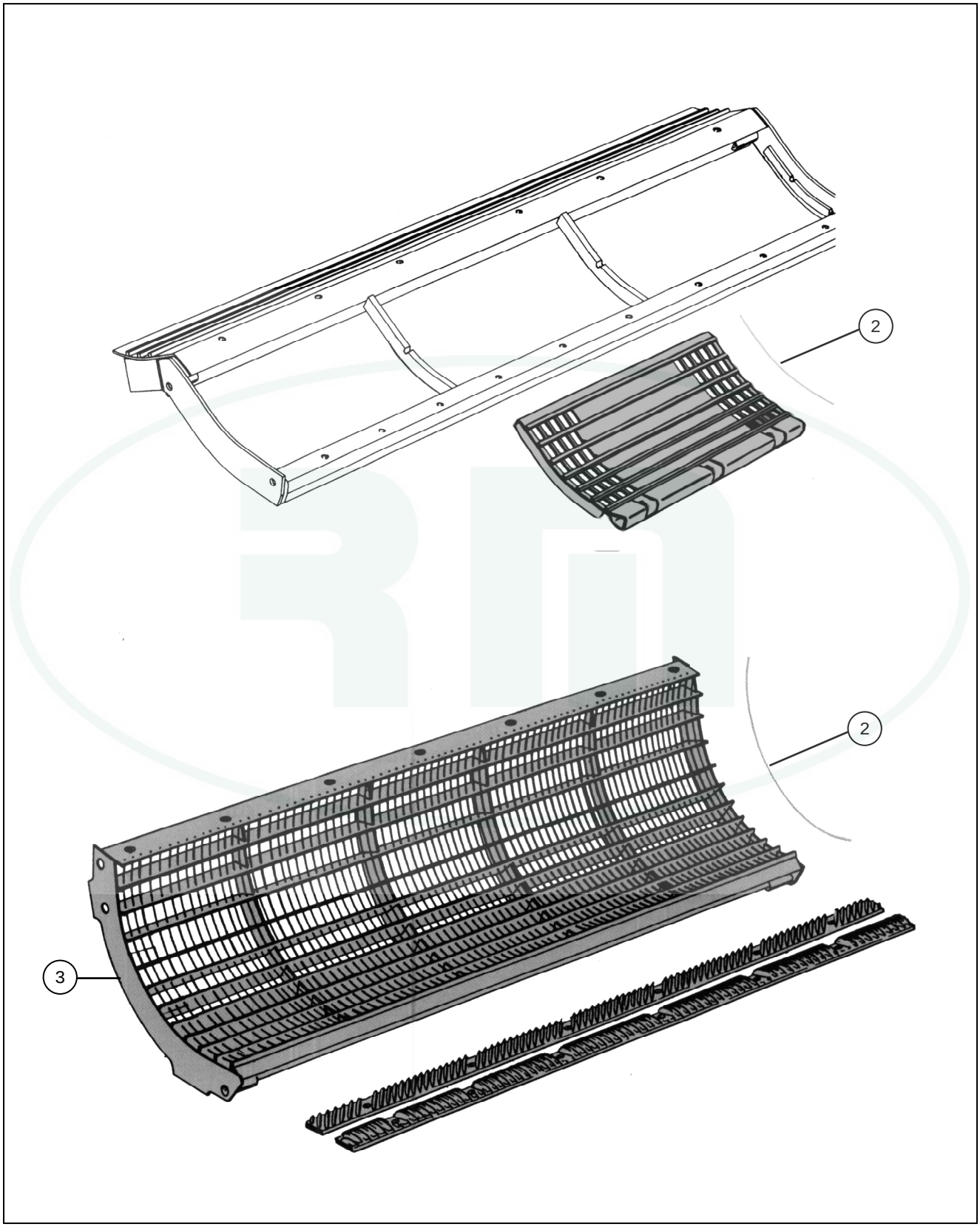

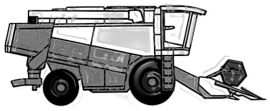

DEUTZ-FAHR

Pos.	Codice Originale	Codice RIMA	Descrizione Description	Applicazione Application	Conf. Pack.
			CONTROBATTITORE *Treshing Concave*		
02	0629.5464	RM12-165	Wire	M2480-2785H/M1300-1640/35.70-36.40/serie	1
03		RM12-109	Concave	tipo universale- Topliner 4060/4065	1
		RM12-163	Concave	tipo universale- Topliner 4070/4090	1
		RM12-164	Concave	Topliner 4070-4090 per Mais	1
		RM12-317	Concave	36.10-36.40- con autolivellante	1
	0628.7751	RM12-310	Concave	M1300-1322/35.70/35.80 senza autolivellante	1
	0652.4042	RM12-162	Concave	Topliner 4070-4090/8-XL/M5670-5690	1
	0654.2049	RM12-313	Concave	35.70/35.80 con autolivellante	1
	0654.9101	RM12-315	Concave	Topliner 4060-4065	1
	111161105000	RM12-160	Concave	M1000/1200/1102/1202	1
	121071108300	RM12-314	Concave	M1600-36.30 senza autolivellante	1
	121231105101	RM12-316	Concave	2480-2785H	1

DEUTZ-FAHR

Battitore – *Treshing Device*

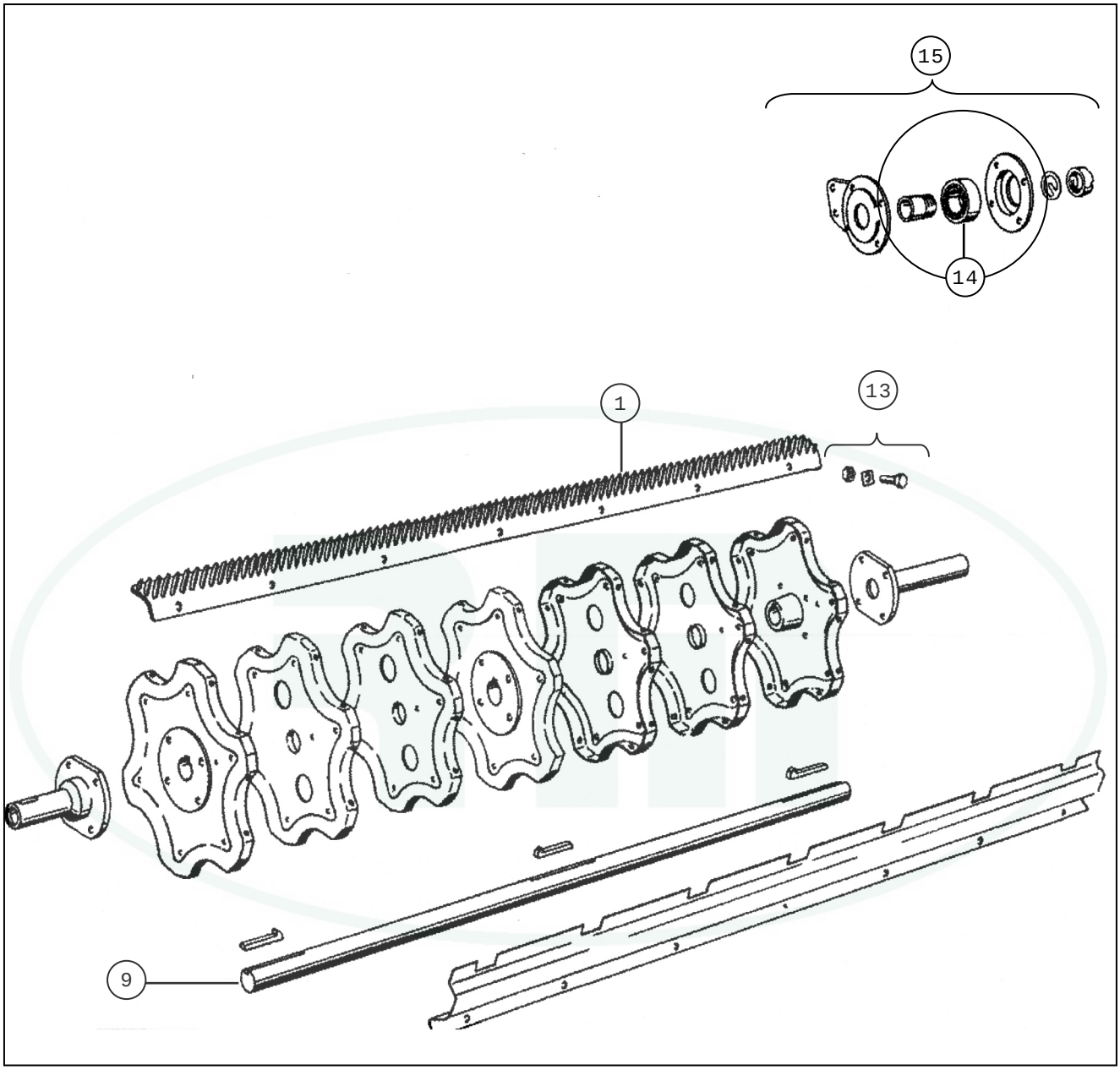

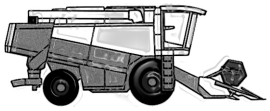

DEUTZ-FAHR

Pos.	Codice Originale	Codice RIMA	Descrizione Description	Applicazione Application	Conf. Pack.
			BATTITORE *Treshing Device*		
01	0650.2946	RM12-318	Rasp bar set	0652.1112 - M900/980/1002/1080/2385	1
	0650.2948	RM12-319	Rasp bar set	0652.1114 - M900/980/1002/1080/2385	1
	0650.2950	RM12-053	Rasp bar set	1000/1200/1102/1202	1
	0650.2952	RM12-054	Rasp bar set	1000/1200/1102/1202	1
	0652.8004	RM12-154	Rasp bar set	M3450	1
	0652.8006	RM12-109	Rasp bar set	M3450	1
	0652.8008	RM12-092	Rasp bar set	2480-2780H	1
	0652.8010	RM12-152	Rasp bar set	2480-2780H	1
	0654.0946	RM12-051	Rasp bar set	M66/600/750	1
	0654.3296	RM12-093	Rasp bar set	34.80/35.40/Powerliner 4030/4035/Actor5510/	1
	0654.3298	RM12-153	Rasp bar set	34.80/35.40/Powerliner 4030/4035/Actor5510/	1
	1600.6800	RM12-055	Rasp bar set	M1300-1322/35.80/35.70/Topliner4060-4068/	1
	1600.6802	RM12-144	Rasp bar set	M1300-1322/35.80/35.70/Topliner4060-4068/	1
	1600.6804	RM12-056	Rasp bar set	M1600-1622/36.10/36.40/Topliner 4070-4090/	1
	1600.6806	RM12-151	Rasp bar set	M1600-1622/36.10/36.40/Topliner 4070-4090/	1
09	0650.6610	RM12-325	Shaft		1
13		RM12-065	Bolt	=19M7171 per Spranghe 0650.2946/48	50
		RM12-080	Bolt	per Spranghe 0650.2950/52	50
		RM12-155	Screw	per Spranghe 1600.6800/02	50
		RM12-156	Bolt	per Spranghe 1600.6804/06	50
14	0117.9163	RM12-158	Bearing	M1300-1630/3570-3640	1
	121230331049	RM12-157	Bearing	M2480-2785	1
15	0625.6577	RM12-159	Bearing	M1300-1630/3570-3640	1

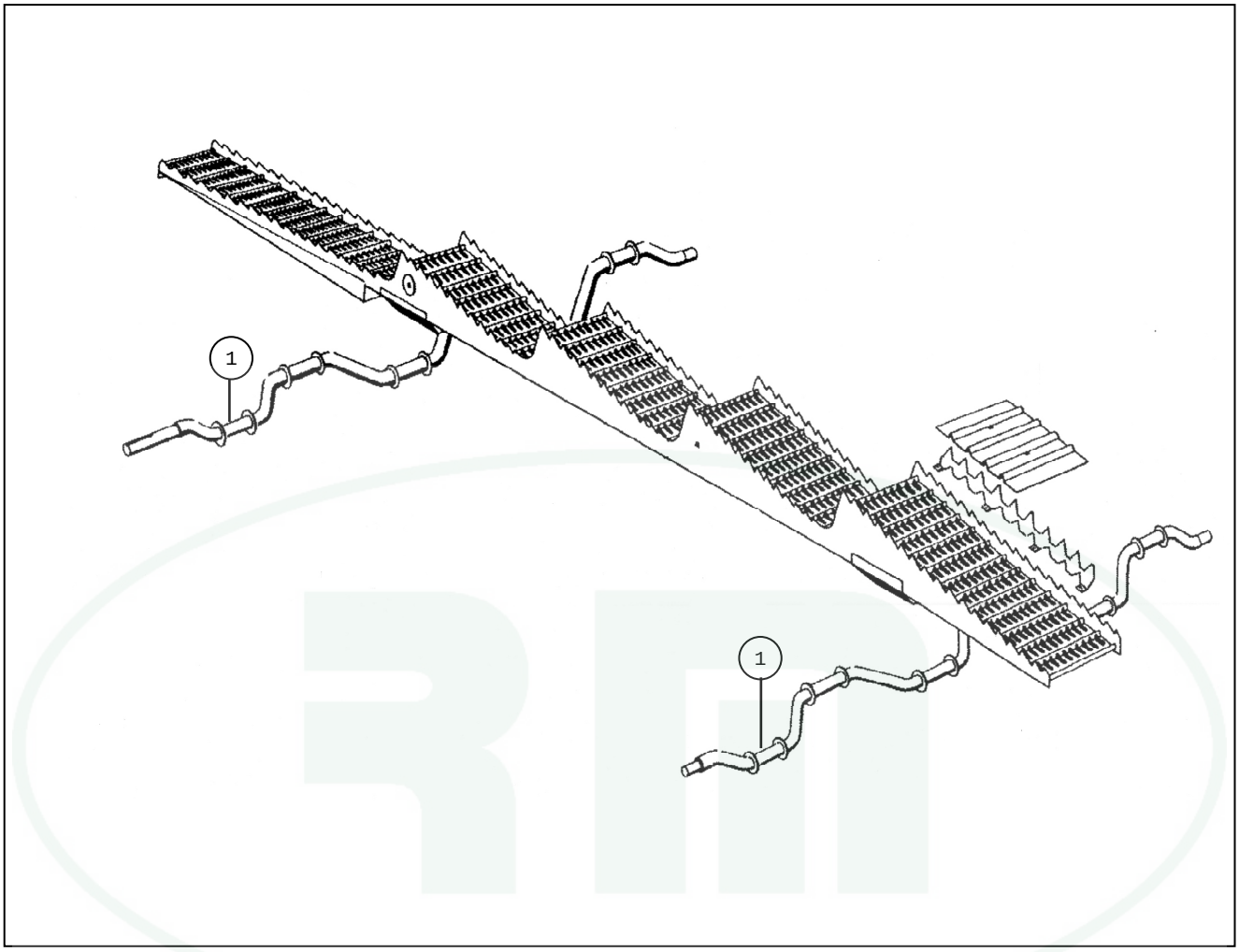
1
1

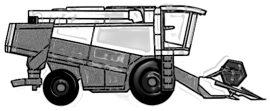

DEUTZ-FAHR

Pos.	Codice Originale	Codice RIMA	Descrizione Description	Applicazione Application	Conf. Pack.
			SCUOTIPAGLIA *Straw Walker*		
01		RM12-284	Crankshaft	1300-3580-4040	1
		RM12-285	Crankshaft	1300-3580-4040	1
		RM12-286	Crankshaft	1600-3610-4070	1
		RM12-287	Crankshaft	1600-3610-4070	1
	0624.0184	RM12-084	Crankshaft	1102-1202	1
	0624.0186	RM12-085	Crankshaft	1102-1202	1

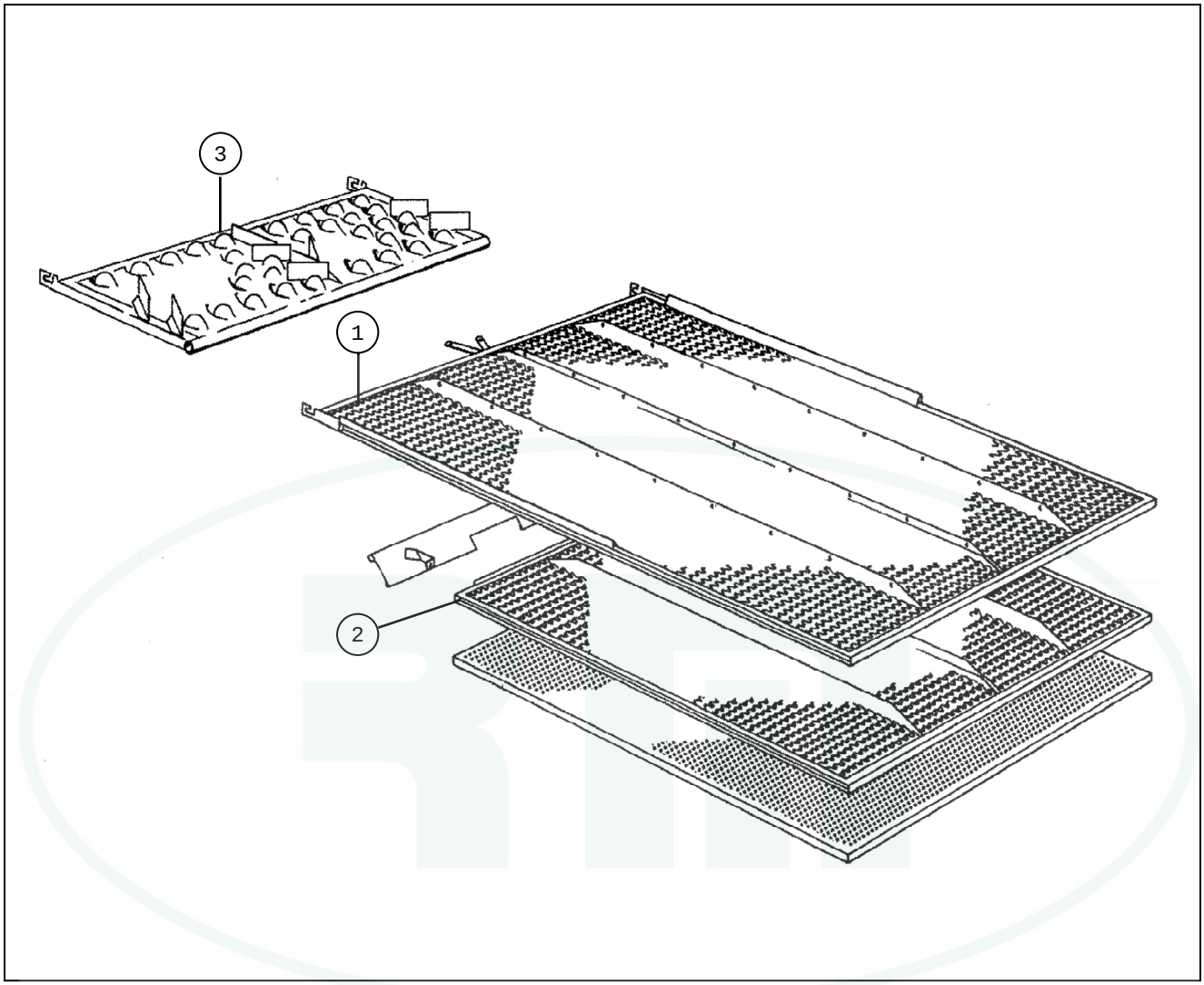
3
1
2

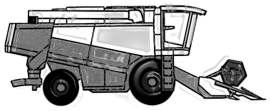

DEUTZ-FAHR

Pos.	Codice Originale	Codice RIMA	Descrizione Description	Applicazione Application	Conf. Pack.
			CRIVELLI *Sieves*		
01		RM12-288	Upper sieve	1000-1102-1200-1202	1
		RM12-289	Upper sieve	1620-1630-3610-3630-3640-3680	1
		RM12-290	Upper sieve	2580-2680-2780-3480-3570-3580	1
		RM12-291	Upper sieve	Powerliner 4030-4035	1
		RM12-292	Upper sieve	Starliner 4040-4045	1
		RM12-293	Upper sieve	Topliner 4060-4065-4068	1
		RM12-294	Upper sieve	Topliner 4070-4075-4080-4090/5670-5680-56	1
		RM12-295	Upper sieve	ACTOR 5510-5520	1
02		RM12-296	Lower sieve	1620-1630-3610-3630-3640-3680	1
		RM12-297	Lower sieve	2580-2680-2780-3480-3570-3580	1
		RM12-298	Lower sieve	Powerliner 4030-4035	1
		RM12-299	Lower sieve	Starliner 4040-4045	1
		RM12-300	Lower sieve	Topliner 4060-4065-4068	1
		RM12-301	Lower sieve	Topliner 4070-4075-4080-4090/5670-5680-56	1
		RM12-302	Lower sieve	ACTOR 5510-5520	1
03		RM12-303	Extension	1000-1102-1200-1203	1
		RM12-304	Extension	2580-2680-2780-3480-3570-3580	1
		RM12-305	Extension	Powerliner 4030-4035	1
		RM12-306	Extension	Starliner 4040-4045	1
		RM12-307	Extension	Topliner 4060-4065-4068	1
		RM12-308	Extension	Topliner 4070-4075-4080-4090/5670-5680-56	1
		RM12-309	Extension	ACTOR 5510-5520	1

DEUTZ-FAHR

Elevatore – *Grain Elevator*

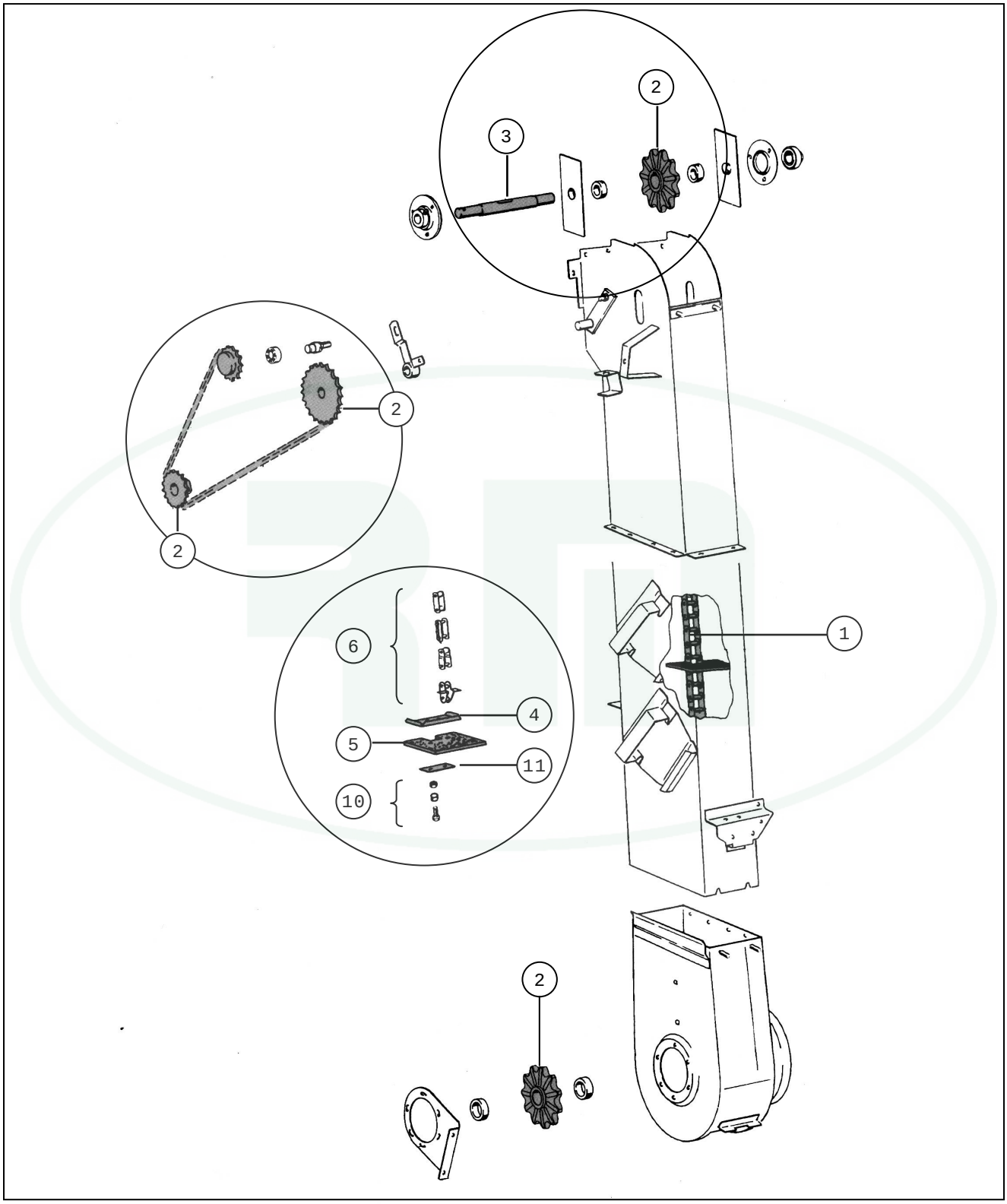

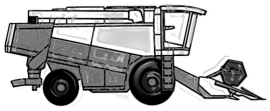

DEUTZ-FAHR

Pos.	Codice Originale	Codice RIMA	Descrizione Description	Applicazione Application	Conf. Pack.
			ELEVATORE *Elevator*		
01		RM12-244	Elevator chain	M88	1
		RM12-251	Elevator chain	lunghezza speciale 146 maglie- Topliner 4080/	1
	0623.7930	RM12-243	Elevator chain	versione lunga- 129 maglie/ M900/1002	1
	0625.5413	RM12-245	Elevator chain	1601.1514/1.2106.160 790.10/mod. M1300/13	1
	0625.6862	RM12-246	Elevator chain	0630.3031/1.2107.160 750.10/mod. 4040/4045	1
	0626.0089	RM12-254	Elevator chain	M2385	1
	0626.1464	RM12-253	Elevator chain	0650.6909/ mod. 2780/2785H	1
	0651.0289	RM12-247	Elevator chain	M1630	1
	0651.9551	RM12-248	Elevator chain	35.80-36.20	1
	111141605600	RM12-242	Elevator chain	0627.8371/ mod. M900/1002	1
	111151605300	RM12-240	Elevator chain	0623.8722/mod. M1000/1102	1
	111151606200	RM12-241	Elevator chain	0624.0476/mod. M1102/1200/1202	1
	121231607700	RM12-252	Elevator chain	M2480-2685	1
	1600.4927	RM12-249	Elevator chain	Topliner 4060-75/5670	1
	1600.6602	RM12-250	Elevator chain	0651.4570/mod. Topliner 4080/4090/M5680/5	1
02	0650.6419	RM12-327	Sprocket		1
	0651.5843	RM12-255	Sprocket	1300-1620/35.70/3578/Powerliner 4030/4035/	1
	0651.5853	RM12-326	Sprocket		1
	0651.7389	RM12-256	Sprocket	35.80-36.40/tutti i Topliner	1
03	0624.1152	RM12-339	Shaft		1
04		RM12-258	Plate	M88	1
	0624.0456	RM12-257	Plate	M1000/1102/1200/1202/M900/1002	1
	0628.8044	RM12-259	Plate	M1300-1622/35.70/Powerliner 4030/4035/Star	1
	0650.5430	RM12-260	Plate	35.70-36.40/Topliner4060-4090/M5670-5690	1
05		RM12-270	Rubber plate	M88	10
	0623.7925	RM12-261	Rubber plate	M900/1002	10
	0624.0454	RM12-024	Rubber plate	M1000/1102/1200/1202	10
	0625.5394	RM12-057	Rubber plate	M1300-1622/3570/Powerliner4030/4035/Starli	10
	0651.4573	RM12-088	Rubber plate	35.70-36.40/Topliner4060-4090/M5670-5690	10
06	0621.3130	RM12-236	Chain link	M1300-1622/3570/Powerliner4030/4035/Starli	1
	0623.6310	RM12-268	Chain link	35.80-36.40/tutti Topliner	1
	0628.1491	RM12-235	Chain link	M1300-1622/3570/Powerliner4030/4035/Starli	1
	0652.1091	RM12-269	Chain link	35.80-36.40/tutti Topliner	1
	0652.1092	RM12-267	Chain link	35.80-36.40/tutti Topliner	1
10		RM12-264	Bolt	Tutti modelli	50
11	0650.5432	RM12-263	Plate	35.70-36.40/Topliner4060-4090/M5670-5690	1
	121061601380	RM12-262	Plate	M1300-1622/3570/Powerliner4030/4035/Starli	1

DEUTZ-FAHR

Trinciapaglia - *Straw Chopper*

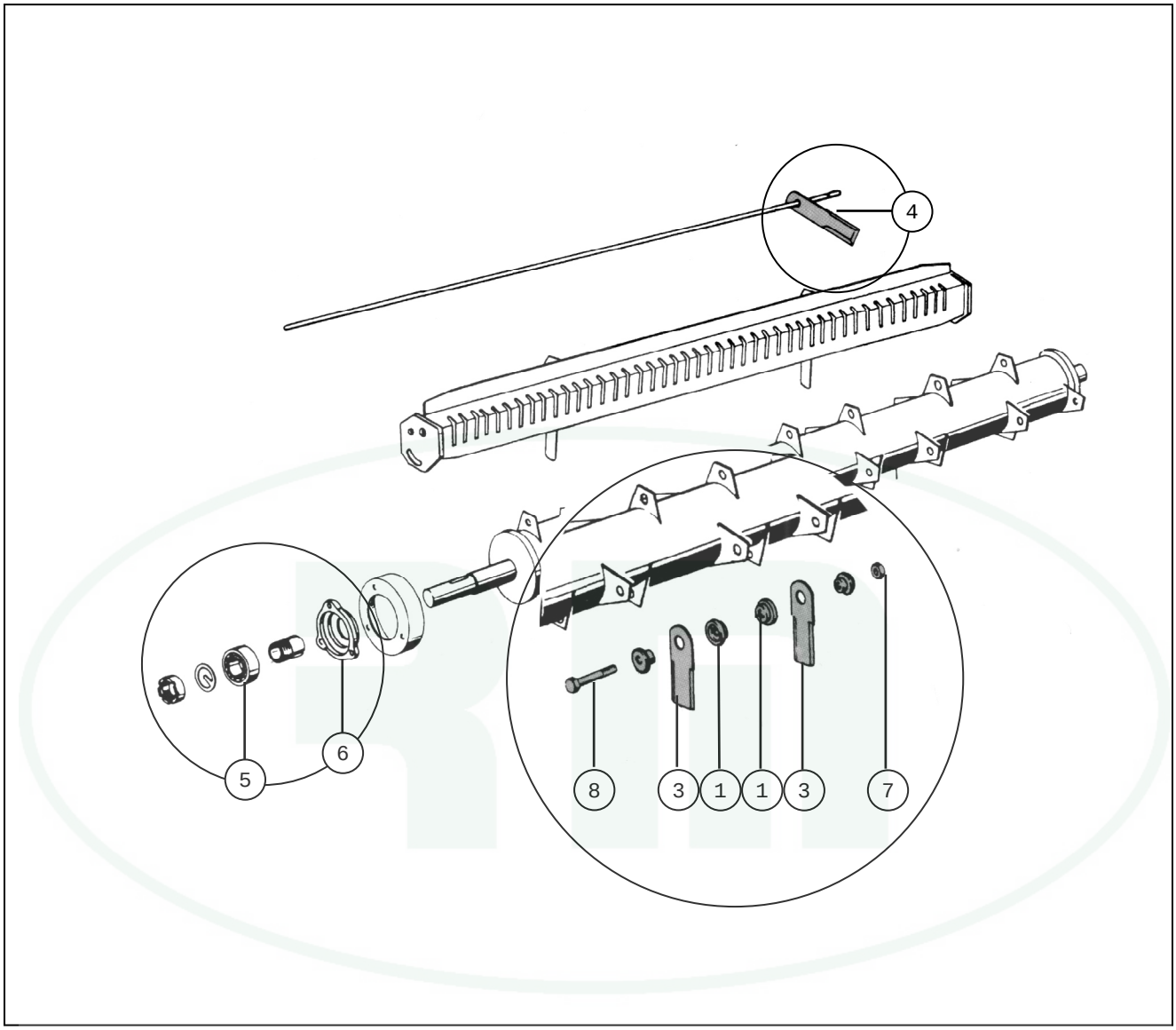

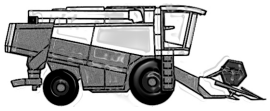

DEUTZ-FAHR

Pos.	Codice Originale	Codice RIMA	Descrizione Description	Applicazione Application	Conf. Pack.
			TRINCIAPAGLIA *Straw Chopper*		
	0621.5746	**RM12-278**	**Bearing**	Per puleggia di azionamento	**1**
	0621.5761	**RM12-279**	**Bearing**	Per puleggia di azionamento	**1**
	1602.3193	**RM12-277**	**Bearing**	Per puleggia di azionamento	**1**
01	**0632.8559**	**RM39-041**	**Inner bushing**	3mm	**50**
	0654.6848	**RM39-042**	**Inner bushing**	4mm	**50**
03		**RM39-079**	**Straw chopper blade**	3mm - con riporto	**20**
		RM39-080	**Straw chopper blade**	4mm - con riporto	**20**
	0654.6847	**RM39-015**	**Straw chopper blade**	4mm / 1601.8722	**20**
	1600.0617	**RM39-006**	**Straw chopper blade**	1601.8724 - 4mm	**20**
	1601.8723	**RM39-002**	**Straw chopper blade**	0623.8558 - 3mm	**20**
	1601.8725	**RM39-010**	**Straw chopper blade**	4mm - dentata 3 lati	**20**
04	**1601.8726**	**RM39-016**	**Counterknife**	0620.4848 - 3mm	**20**
	1601.8727	**RM39-014**	**Counterknife**	3mm	**20**
05	**0110.9302**	**RM12-276**	**Bearing**	Per albero trinciapaglia Biso	**1**
	0621.5748	**RM12-281**	**Bearing**	Per albero trinciapaglia	**1**
	0621.5762	**RM12-283**	**Bearing**	Per albero trinciapaglia	**1**
	1602.3175	**RM12-280**	**Bearing**	Per albero trinciapaglia	**1**
06	**0621.5786**	**RM12-282**	**Housing**	Per albero trinciapaglia	**1**
07	**0654.6849**	**RM39-081**	**Washer**		**1**
08	**0110.0110**	**RM12-275**	**Bolt**	per lame spessore 4mm	**50**
	0114.4595	**RM12-274**	**Bolt**	per lame spessore 3mm	**50**

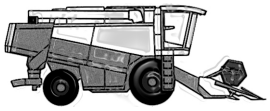

DEUTZ-FAHR

Pos.	Codice Originale	Codice RIMA	Descrizione Description	Applicazione Application	Conf. Pack.
			VARIE *Various*		
	0623.9355	**RM12-075**	**Coupling**		**1**
	0624.0312	**RM12-074**	**Bushing**	1.1116.140.241.00	**1**
	0624.0313	**RM12-073**	**Bushing**	1.1116.140.242.00	**1**
	0624.2071	**RM12-083**	**Sprocket**	1.1123.021.790.00	**1**
	0625.5604	**RM12-321**	**Brake disc**		**1**
	0628.6045	**RM12-072**	**Bolt**	1.1114.150.125.00	**1**
	0650.8396	**RM12-132**	**Plate**		**1**
	0650.8714	**RM12-137**	**Support**		**1**
	0650.8715	**RM12-138**	**Hub**		**1**
	0650.8759	**RM12-139**	**Hub**		**1**
	0650.9338	**RM12-141**	**Shaft**		**1**
	0650.9524	**RM12-142**	**Bolt**		**1**
	0651.8416	**RM12-320**	**Brake disc**		**1**
	111103008110	**RM12-089**	**Clutch disc**		**1**
	111143005200	**RM12-311**	**Clutch disc**		**1**
	1111630056000	**RM12-090**	**Clutch disc**		**1**
	1600.0560	**RM12-134**	**Brake disc**		**1**
	1600.1743	**RM12-135**	**Silentblock**		**1**
	1600.2594	**RM12-136**	**Sprocket**		**1**

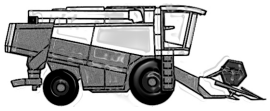

DEUTZ-FAHR

Pos.	Codice Originale	Codice RIMA	Descrizione Description	Applicazione Application	Conf. Pack.
			CINGHIE *Belts*		
	01100903		**Belt**	M600 M660 / M770 M750 M88 / M88S	**1**
	01116080		**Belt**	M600 M660 / M770 M750 M88 / M88S	**1**
	01116096		**Belt**	M88 / M88S	**1**
	01116097		**Belt**		**1**
	01129970		**Belt**	M1300 / M1302 / 1302H	**1**
	01130742		**Belt**	M600 M750	**1**
	01136747		**Belt**	M1102 / M1202 M88 / M88S	**1**
	01139082		**Belt**	M660 / M770	**1**
	01139085		**Belt**	M600 M660 / M770	**1**
	01139089		**Belt**	M600	**1**
	01139090		**Belt**	M600	**1**
	01139204		**Belt**	M2480 / M2780	**1**
	01139206		**Belt**		**1**
	01139207		**Belt**		**1**
	01139209		**Belt**		**1**
	01139213		**Belt**	M88 / M88S	**1**
	01139214		**Belt**	M88 / M88S	**1**
	01139216		**Belt**	M1600 / M1620 / M1630 M600 M750 M88 /	**1**
	01139217		**Belt**	M600	**1**
	01139218		**Belt**	M1000 / M1200	**1**
	01139220		**Belt**	M750 M88 / M88S	**1**
	01139221		**Belt**	M1000 / M1200	**1**
	01139222		**Belt**	M1000 / M1200	**1**
	01139223		**Belt**	M1000 / M1200	**1**
	01139229		**Belt**	M3630 / M3640	**1**
	01139231		**Belt**	M1000 / M1200	**1**
	01139233		**Belt**	M2385 M2480 / M2780	**1**
	01139240		**Belt**		**1**
	01139241		**Belt**	M1300 / M1302 / 1302H M3280 M3570 / M3	**1**
	01139242		**Belt**	M1600 / M1620 / M1630 M3610 M3630 / M3	**1**
	01139245		**Belt**		**1**
	01139247		**Belt**	M660 / M770 M750	**1**
	01139251		**Belt**		**1**
	01139252		**Belt**	M88 / M88S	**1**
	01139253		**Belt**	M88 / M88S	**1**
	01139258		**Belt**	M2480 / M2780	**1**
	01139259		**Belt**	M2480 / M2780	**1**
	01139260		**Belt**	M2480 / M2780	**1**
	01139301		**Belt**	M1000 / M1200	**1**

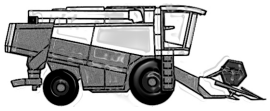

DEUTZ-FAHR

Pos.	Codice Originale	Codice RIMA	Descrizione Description	Applicazione Application	Conf. Pack.
	01141510		**Belt**	M3610 M3630 / M3640	**1**
	01141530		**Belt**	M3630 / M3640	**1**
	01141591		**Belt**	M3280 M3570 / M3578 M3580 M3610 M363	**1**
	01141595		**Belt**	M3280 M3570 / M3578 M3630 / M3640	**1**
	01141608		**Belt**	M3280 M3570 / M3578 M3630 / M3640 STA	**1**
	01141613		**Belt**	M1600 / M1620 / M1630 M3280 M3570 / M3	**1**
	01141615		**Belt**	M3280 M3570 / M3578 M3630 / M3640	**1**
	01141637		**Belt**		**1**
	01141642		**Belt**		**1**
	01141643		**Belt**		**1**
	01141644		**Belt**		**1**
	01141645		**Belt**	M1600 / M1620 / M1630 M3280 M3570 / M3	**1**
	01141666		**Belt**	M3280 M3570 / M3578 M3580 M3610 M363	**1**
	01141749		**Belt**	M3630 / M3640	**1**
	01141788		**Belt**		**1**
	01141789		**Belt**	M3580 M3610 M3630 / M3640	**1**
	01141798		**Belt**	M1102 / M1202	**1**
	01141816		**Belt**	M3480 / M3540 POWERLINER 4030 / 4035-	**1**
	01141819		**Belt**	M3480 / M3540	**1**
	01141820		**Belt**	M3480 / M3540	**1**
	01141850		**Belt**	M3480 / M3540	**1**
	01141909		**Belt**	M3480 / M3540	**1**
	01141912		**Belt**	M3480 / M3540	**1**
	01141917		**Belt**	M3480 / M3540 POWERLINER 4030 / 4035-	**1**
	01141918		**Belt**	M3480 / M3540	**1**
	01141938		**Belt**	M3480 / M3540	**1**
	01141941		**Belt**	M3610 M3630 / M3640 STARLINER 4040 / 4	**1**
	01141944		**Belt**	M3480 / M3540 TOPLINER 4060 / 4065-	**1**
	01141958		**Belt**	M3480 / M3540	**1**
	01141971		**Belt**	M3280 M3570 / M3578 M3580 POWERLINE	**1**
	01142328		**Belt**		**1**
	01143213		**Belt**		**1**
	01143410		**Belt**	TOPLINER 4060 / 4065-4070 / 4075 / 4080 / 4	**1**
	01143412		**Belt**	TOPLINER 4060 / 4065-	**1**
	01143413		**Belt**	TOPLINER 4060 / 4065-4070 / 4075 / 4080 / 4	**1**
	01145025		**Belt**	TOPLINER 4060 / 4065-4070 / 4075 / 4080 / 4	**1**
	01145026		**Belt**	TOPLINER 4060 / 4065-	**1**
	01145036		**Belt**		**1**
	01145049		**Belt**	TOPLINER 4060 / 4065-4070 / 4075 / 4080 / 4	**1**
	01145050		**Belt**	TOPLINER 4060 / 4065-	**1**
	01145051		**Belt**	TOPLINER 4060 / 4065-4070 / 4075 / 4080 / 4	**1**

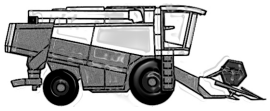

DEUTZ-FAHR

Pos.	Codice Originale	Codice RIMA	Descrizione Description	Applicazione Application	Conf. Pack.
	01145052		**Belt**	TOPLINER 4060 / 4065-4070 / 4075 / 4080 / 4	**1**
	01145053		**Belt**	TOPLINER 4060 / 4065-4070 / 4075 / 4080 / 4	**1**
	01145054		**Belt**	TOPLINER 4060 / 4065-4070 / 4075 / 4080 / 4	**1**
	01145055		**Belt**	TOPLINER 4060 / 4065-4070 / 4075 / 4080 / 4	**1**
	01145056		**Belt**	TOPLINER 4070 / 4075 / 4080 / 4090-	**1**
	01145057		**Belt**	TOPLINER 4070 / 4075 / 4080 / 4090-	**1**
	01145093		**Belt**		**1**
	01145097		**Belt**	TOPLINER 4060 / 4065-	**1**
	01145102		**Belt**	TOPLINER 4060 / 4065-	**1**
	01145143		**Belt**		**1**
	01145186		**Belt**		**1**
	01145187		**Belt**	TOPLINER 4060 / 4065-4070 / 4075 / 4080 / 4	**1**
	01145188		**Belt**	TOPLINER 4060 / 4065-4070 / 4075 / 4080 / 4	**1**
	01145202		**Belt**	TOPLINER 4060 / 4065-	**1**
	01145203		**Belt**		**1**
	01145211		**Belt**	TOPLINER 4060 / 4065-	**1**
	01145216		**Belt**	POWERLINER 4030 / 4035-	**1**
	01145224		**Belt**	POWERLINER 4030 / 4035-	**1**
	01145226		**Belt**	POWERLINER 4030 / 4035-	**1**
	01145260		**Belt**	POWERLINER 4030 / 4035-	**1**
	01145261		**Belt**	POWERLINER 4030 / 4035-	**1**
	01145262		**Belt**	POWERLINER 4030 / 4035-	**1**
	01145263		**Belt**	POWERLINER 4030 / 4035-	**1**
	01145318		**Belt**	STARLINER 4040 / 4045-TOPLINER 4070 / 4	**1**
	01145329		**Belt**	TOPLINER 4070 / 4075 / 4080 / 4090-	**1**
	01145330		**Belt**		**1**
	01145331		**Belt**	STARLINER 4040 / 4045-TOPLINER 4070 / 4	**1**
	01145332		**Belt**	TOPLINER 4070 / 4075 / 4080 / 4090-	**1**
	01145335		**Belt**	POWERLINER 4030 / 4035-	**1**
	01145369		**Belt**	TOPLINER 4070 / 4075 / 4080 / 4090-	**1**
	01145374		**Belt**	TOPLINER 4070 / 4075 / 4080 / 4090-	**1**
	01145465		**Belt**		**1**
	01145475		**Belt**	TOPLINER 4070 / 4075 / 4080 / 4090-	**1**
	01145479		**Belt**	TOPLINER 4070 / 4075 / 4080 / 4090-	**1**
	01145504		**Belt**		**1**
	01145504		**Belt**		**1**
	01145505		**Belt**		**1**
	01168304		**Belt**	M900 / M922 / M1002	**1**
	01174971		**Belt**	M88 / M88S	**1**
	01180173		**Belt**		**1**
	02234343		**Belt**	M1600 / M1620 / M1630 M2480 / M2780 M3	**1**

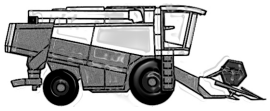

DEUTZ-FAHR

Pos.	Codice Originale	Codice RIMA	Descrizione Description	Applicazione Application	Conf. Pack.
	02235175		**Belt**	M660 / M770 M900 / M922 / M1002	**1**
	02235177		**Belt**	M3610 M3630 / M3640 TOPLINER 4060 / 40	**1**
	02235178		**Belt**	M660 / M770 M900 / M922 / M1002	**1**
	02235179		**Belt**	M900 / M922 / M1002	**1**
	02235180		**Belt**	M1102 / M1202 M2385 M2480 / M2780 M32	**1**
	02235254		**Belt**	M1102 / M1202 M900 / M922 / M1002 POW	**1**
	02235531		**Belt**	M900 / M922 / M1002	**1**
	02235532		**Belt**	M2385 M2480 / M2780	**1**
	02235533		**Belt**	M900 / M922 / M1002	**1**
	02235713		**Belt**	M3630 / M3640	**1**
	02237477		**Belt**	TOPLINER 4070 / 4075 / 4080 / 4090-	**1**
	06153715		**Belt**		**1**
	06154998		**Belt**		**1**
	06154999		**Belt**		**1**
	06210851		**Belt**	M2480 / M2780	**1**
	06210852		**Belt**		**1**
	06210853		**Belt**		**1**
	06210869		**Belt**	M1300 / M1302 / 1302H M1600 / M1620 / M	**1**
	06210890		**Belt**	M1600 / M1620 / M1630 M3280 M3570 / M3	**1**
	06210915		**Belt**	M1000 / M1200 M600 M750 M88 / M88S	**1**
	06210916		**Belt**		**1**
	06210917		**Belt**	M1300 / M1302 / 1302H M1600 / M1620 / M	**1**
	06210921		**Belt**	M900 / M922 / M1002	**1**
	06210922		**Belt**	M2480 / M2780 M600 M660 / M770 M750	**1**
	06210923		**Belt**	M2480 / M2780 M88 / M88S	**1**
	06210927		**Belt**	M2385	**1**
	06210971		**Belt**		**1**
	06210975		**Belt**	M2480 / M2780	**1**
	06210988		**Belt**		**1**
	06210989		**Belt**	M900 / M922 / M1002	**1**
	06210990		**Belt**	M2480 / M2780	**1**
	06210991		**Belt**	M1000 / M1200 M1102 / M1202 M1300 / M1	**1**
	06210993		**Belt**	M2480 / M2780	**1**
	06210997		**Belt**	M1000 / M1200	**1**
	06211001		**Belt**	M660 / M770 M900 / M922 / M1002	**1**
	06211003		**Belt**		**1**
	06211004		**Belt**	M660 / M770	**1**
	06211006		**Belt**	M900 / M922 / M1002	**1**
	06211010		**Belt**	M660 / M770 M750	**1**
	06211014		**Belt**	M1300 / M1302 / 1302H M1600 / M1620 / M	**1**
	06211023		**Belt**	M88 / M88S	**1**

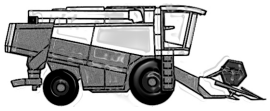

DEUTZ-FAHR

Pos.	Codice Originale	Codice RIMA	Descrizione Description	Applicazione Application	Conf. Pack.
	06211026		**Belt**	M1000 / M1200 M1102 / M1202 M3480 / M3	**1**
	06211031		**Belt**	M1102 / M1202 M3480 / M3540	**1**
	06211032		**Belt**	M88 / M88S	**1**
	06211033		**Belt**		**1**
	06211034		**Belt**	M1600 / M1620 / M1630 M3580 M3610 M60	**1**
	06211035		**Belt**	M88 / M88S	**1**
	06211042		**Belt**		**1**
	06211053		**Belt**	M660 / M770 M750	**1**
	06212833		**Belt**		**1**
	06212835		**Belt**		**1**
	06212866		**Belt**	M1102 / M1202 M1600 / M1620 / M1630 M3	**1**
	06212870		**Belt**	M600 M660 / M770 M750 M88 / M88S	**1**
	06212882		**Belt**		**1**
	06212902		**Belt**		**1**
	06212915		**Belt**	M600 M660 / M770 M750	**1**
	06212918		**Belt**		**1**
	06212919		**Belt**	M1600 / M1620 / M1630 M900 / M922 / M10	**1**
	06212924		**Belt**	M2385 M900 / M922 / M1002	**1**
	06212925		**Belt**	M900 / M922 / M1002	**1**
	06212933		**Belt**	M1102 / M1202	**1**
	06212950		**Belt**		**1**
	06215192		**Belt**		**1**
	06215195		**Belt**	M600 M660 / M770 M750 M88 / M88S	**1**
	06215196		**Belt**	M1000 / M1200	**1**
	06215197		**Belt**	M2385 M900 / M922 / M1002	**1**
	06215199		**Belt**	M1000 / M1200 M1102 / M1202	**1**
	06215202		**Belt**	M2480 / M2780	**1**
	06215203		**Belt**	M2480 / M2780	**1**
	06215204		**Belt**	M2385	**1**
	06215205		**Belt**	M2385 M2480 / M2780	**1**
	06215206		**Belt**		**1**
	06215209		**Belt**	M2480 / M2780	**1**
	06215212		**Belt**		**1**
	06215213		**Belt**	M900 / M922 / M1002	**1**
	06215214		**Belt**	M2480 / M2780 M3480 / M3540	**1**
	06215215		**Belt**	M900 / M922 / M1002	**1**
	06215216		**Belt**	M2385	**1**
	06215217		**Belt**	M1000 / M1200 M1102 / M1202 M1300 / M1	**1**
	06215220		**Belt**	M2385 M2480 / M2780 M900 / M922 / M100	**1**
	06215221		**Belt**	M1300 / M1302 / 1302H M1600 / M1620 / M	**1**
	06215222		**Belt**	M1000 / M1200 M1102 / M1202 M1300 / M1	**1**

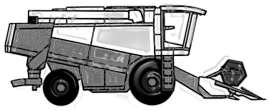

DEUTZ-FAHR

Pos.	Codice Originale	Codice RIMA	Descrizione Description	Applicazione Application	Conf. Pack.
	06215223		**Belt**	M3570 / M3578	**1**
	06215226		**Belt**		**1**
	06215228		**Belt**		**1**
	06215229		**Belt**		**1**
	06215233		**Belt**	M1300 / M1302 / 1302H M1600 / M1620 / M	**1**
	06215234		**Belt**	M1300 / M1302 / 1302H	**1**
	06215235		**Belt**	M1600 / M1620 / M1630	**1**
	06215236		**Belt**	M900 / M922 / M1002	**1**
	06215237		**Belt**	M900 / M922 / M1002	**1**
	06215238		**Belt**	M2480 / M2780	**1**
	06215239		**Belt**	M2480 / M2780 POWERLINER 4030 / 4035-	**1**
	06215240		**Belt**	M2480 / M2780	**1**
	06215241		**Belt**		**1**
	06215242		**Belt**	M1600 / M1620 / M1630	**1**
	06215243		**Belt**	M2385	**1**
	06215244		**Belt**	M3280 M3570 / M3578 STARLINER 4040 / 4	**1**
	06215245		**Belt**	M2480 / M2780	**1**
	06215248		**Belt**	M1300 / M1302 / 1302H M3630 / M3640	**1**
	06215249		**Belt**		**1**
	06215250		**Belt**	M2385 M900 / M922 / M1002	**1**
	06215253		**Belt**	M2480 / M2780	**1**
	06215255		**Belt**	M2480 / M2780	**1**
	06215257		**Belt**	M2480 / M2780	**1**
	06215258		**Belt**	M2480 / M2780 POWERLINER 4030 / 4035-	**1**
	06215259		**Belt**	M1600 / M1620 / M1630	**1**
	06215261		**Belt**		**1**
	06215262		**Belt**	M2480 / M2780	**1**
	06215268		**Belt**	M3630 / M3640	**1**
	06215455		**Belt**		**1**
	06228207		**Belt**		**1**
	06234476		**Belt**	M600 M660 / M770 M750	**1**
	06236157		**Belt**	M88 / M88S	**1**
	06236657		**Belt**	M600 M660 / M770 M750	**1**
	06240268		**Belt**	M1000 / M1200 M1102 / M1202	**1**
	06240407		**Belt**	M1000 / M1200	**1**
	06241147		**Belt**	M1000 / M1200 M1102 / M1202	**1**
	06241305		**Belt**	M1000 / M1200 M1102 / M1202	**1**
	06255583		**Belt**	M1300 / M1302 / 1302H	**1**
	06256381		**Belt**	M1300 / M1302 / 1302H M1600 / M1620 / M	**1**
	06256546		**Belt**	M1600 / M1620 / M1630 M3280 M3570 / M3	**1**
	06256619		**Belt**	M1300 / M1302 / 1302H M1600 / M1620 / M	**1**

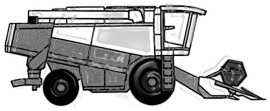

DEUTZ-FAHR

Pos.	Codice Originale	Codice RIMA	Descrizione Description	Applicazione Application	Conf. Pack.
	06256714		Belt	M1300 / M1302 / 1302H M1600 / M1620 / M	1
	06257897		Belt	M1600 / M1620 / M1630	1
	06257898		Belt	M3280 M3570 / M3578 M3580 M3610 M363	1
	06273236		Belt	M2385	1
	06273237		Belt	M2385	1
	06285949		Belt	M2385	1
	06311053		Belt	M600	1
	06528420		Belt	M1102 / M1202	1
	0880009461533		Belt		1
	0880022150302		Belt		1
	0880022150475		Belt		1
	0880022150484		Belt		1
	0880022152162		Belt		1
	0880022153165		Belt		1
	0880022153200		Belt		1
	0880022153231		Belt		1
	0880022153250		Belt		1
	0880022153300		Belt		1
	0880022153305		Belt		1
	0880022153310		Belt		1
	0880022153315		Belt		1
	0880022153345		Belt		1
	0880022153355		Belt		1
	0880022153360		Belt		1
	0880022153363		Belt	M600	1
	0880022153412		Belt		1
	0880022155159		Belt		1
	0880022155201		Belt		1
	0880022155271		Belt		1
	0880022155273		Belt		1
	0880022155276		Belt		1
	0880022155280		Belt		1
	0880022155292		Belt		1
	0880022155325		Belt		1
	0880022155335		Belt		1
	0880022155370		Belt		1
	0880022155394		Belt		1
	0880022155425		Belt		1
	0880022155439		Belt		1
	0880022155444		Belt		1
	0880022155450		Belt		1

Pos.	Codice Originale	Codice RIMA	Descrizione Description	Applicazione Application	Conf. Pack.
	0880022155513		Belt		1
	0880022155545		Belt		1
	0880022156135		Belt		1
	0880022156254		Belt		1
	0880022156280		Belt		1
	0880022156300		Belt		1
	0880022156343		Belt		1
	0880022156375		Belt		1
	0880022156398		Belt		1
	0880022156425		Belt		1
	0880022156435		Belt		1
	0880022156475		Belt		1
	0880022156500		Belt		1
	0880022157290		Belt		1
	0880022158103		Belt		1
	0880022158254		Belt		1
	0880077530318		Belt		1
	0880077530327		Belt		1
	0880077532080		Belt		1
	0880077532091		Belt		1
	0880077532096		Belt		1
	0880077532107		Belt		1
	0880077532109		Belt		1
	0880077532116		Belt		1
	0880077532126		Belt		1
	0880077532129		Belt		1
	0880077532134		Belt		1
	0880077532190		Belt		1
	0880077533087		Belt		1
	0880077533116		Belt		1
	0880077533123		Belt		1
	0880077533128		Belt		1
	0880077533131		Belt		1
	0880077533132		Belt		1
	0880077533191		Belt		1
	0880077534132		Belt		1
	0880077534181		Belt		1
	0880077534233		Belt		1
	0880077534344		Belt		1
	0880077534369		Belt		1
	0880077535175		Belt		1

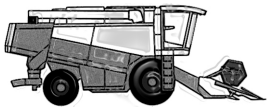

DEUTZ-FAHR

Pos.	Codice Originale	Codice RIMA	Descrizione Description	Applicazione Application	Conf. Pack.
	0880077535186		Belt		1
	0880077535200		Belt		1
	0880077535265		Belt		1
	0880077535289		Belt		1
	0880077535320		Belt		1
	0880077536157		Belt		1
	0880077536207		Belt		1
	0880077536212		Belt		1
	0880077536280		Belt		1
	0880077536350		Belt	M2480 / M2780	1
	0880077536375		Belt		1
	0880077536410		Belt		1
	0880077536450		Belt		1
	0880077536511		Belt		1
	0880077536513		Belt		1
	0880077536560		Belt		1
	0880077536660		Belt		1
	0880078596410		Belt	M1000 / M1200	1
	0890009461125		Belt		1
	0890009461299		Belt		1
	0890009461303		Belt		1
	0890009461327		Belt		1
	0890009461329		Belt		1
	0890009461503		Belt		1
	0890009461504		Belt		1
	0890009461505		Belt		1
	0890009461506		Belt		1
	0890009461510		Belt		1
	0890009461533		Belt		1
	0890009461534		Belt		1
	0890009461628		Belt		1
	0890009461649		Belt	M1600 / M1620 / M1630	1
	0890009461725		Belt		1
	0890009461779		Belt		1
	0890009461784		Belt		1
	0890009461785		Belt		1
	0890009461787		Belt		1
	0890009461806		Belt		1
	0890009461836		Belt		1
	0890009461886		Belt		1
	0890009461888		Belt		1

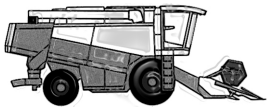

DEUTZ-FAHR

Pos.	Codice Originale	Codice RIMA	Descrizione Description	Applicazione Application	Conf. Pack.
	0890009461893		Belt		1
	0890009461898		Belt		1
	0890009461899		Belt		1
	0890009464699		Belt		1
	0890009466028		Belt		1
	0890009466029		Belt		1
	0890009466044		Belt		1
	0890009466045		Belt		1
	0890009466046		Belt		1
	0890009466049		Belt		1
	0890009466050		Belt		1
	0890009466051		Belt		1
	0890009466052		Belt		1
	0890009466053		Belt		1
	0890009466056		Belt		1
	0890009466057		Belt		1
	0890009466100		Belt		1
	0890009466101		Belt		1
	0890009466183		Belt		1
	0890009466184		Belt		1
	0890009466185		Belt		1
	0890009466189		Belt		1
	0890009466191		Belt		1
	0890009466193		Belt		1
	0890009466194		Belt		1
	0890009466195		Belt		1
	0890009466321		Belt		1
	0890009466325		Belt		1
	0890009466326		Belt		1
	0890052396052		Belt		1
	1101202012700		Belt		1
	1101502013800		Belt		1
	1101502013810		Belt		1
	1101802013600		Belt		1
	1101902023300		Belt		1
	1110612010700		Belt		1
	1111012011000		Belt		1
	1111030011900		Belt		1
	1111612011900		Belt	M1000 / M1200	1
	1111614013400		Belt		1
	1111615011700		Belt		1

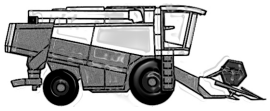

DEUTZ-FAHR

Pos.	Codice Originale	Codice RIMA	Descrizione Description	Applicazione Application	Conf. Pack.
	1111627019300		**Belt**		**1**
	1111630017300		**Belt**		**1**
	1210630013100		**Belt**		**1**
	1210710011600		**Belt**		**1**
	1210712015910		**Belt**	M1300 / M1302 / 1302H	**1**
	1210713013900		**Belt**		**1**
	1210714019800		**Belt**		**1**
	1210737011100		**Belt**		**1**
	1210737011900		**Belt**	M1300 / M1302 / 1302H M1600 / M1620 / M	**1**

HESSTON

Barra di Taglio - *Cutting Bar*

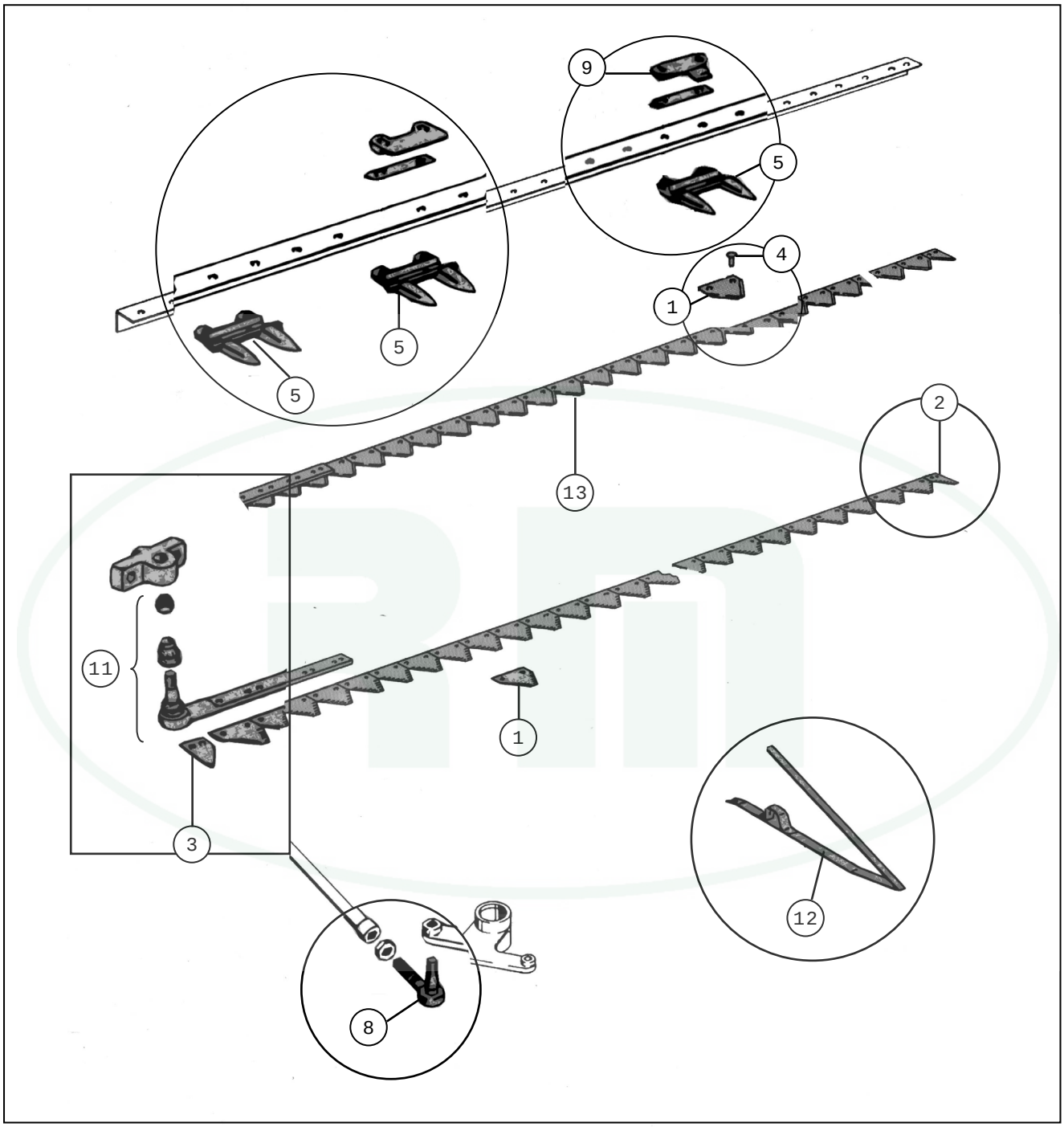

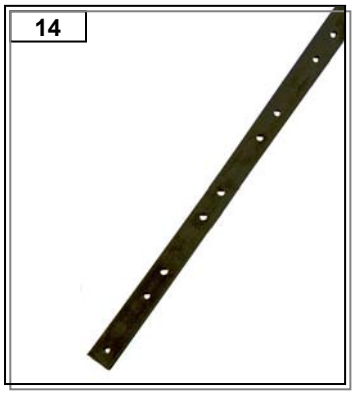

US = rigata sotto
TS = rigata sopra
TTQST = testa tonda quadro sotto t.
TT = testa tonda
TPSV = testa piana svasata

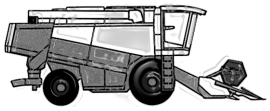

HESSTON

Pos.	Codice Originale	Codice RIMA	Descrizione Description	Applicazione Application	Conf. Pack.
			BARRA DI TAGLIO *Cutterbar*		
01	700049213-CR	RM19-008	Knife section	2,0 mm. - 6400	25
	700049361	RM19-038	Knife section		25
	700049916-CR	RM19-006	Knife section	PT7/1010	25
02	700048868-CR	RM19-009	Half section	2,0 mm. - 6400	1
	700049874-CR	RM19-007	Half section	2,7 mm.	1
	700748384	RM19-031	Half section	2,7 mm.	1
03	706253801	RM19-040	Plate		1
	709253793	RM19-039	Plate		1
04		RM19-036	Rivet		2
05	700049239	RM19-016	Double finger	700845	1
	700049270	RM19-020	Double finger		1
	700049312	RM19-018	Double finger		1
	700700845	RM19-022	Double finger	GB215	1
08	707021694	RM19-026	Ball joint		1
	707745581	RM19-024	Ball joint		1
	708722977	RM19-025	Ball joint		1
09	700024216	RM19-023	Knife clip		10
	700440846	RM19-021	Knife clip		10
	706108518	RM19-033	Knife clip		10
	706586622	RM19-029	Knife clip		10
	706586630	RM19-019	Knife clip	49312	10
11	700602300	RM19-002	Knife head	701154566	1
	706404248	RM19-001	Knife head	PT/1010	1
	706436430	RM19-027	Ball joint		1
	706582530	RM19-003	Knife head	1070	1
12		RM19-035	Crop lifter		1
		RM19-042	Bolt		1
13	700441076	RM19-005	Complete knife	PT7	1
	700451955	RM19-032	Complete knife	1010	1
	700602284	RM19-012	Complete knife		1
	700664793	RM19-013	Complete knife		1
	700748202	RM19-037	Complete knife		1
	700748400	RM19-030	Complete knife	1070	1
	706429476	RM19-041	Complete knife		1
	706582522	RM19-034	Complete knife	1090	1
14		RM19-004	Knife back	20x5,5x2300	1

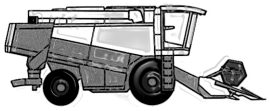

HESSTON

Pos.	Codice Originale	Codice RIMA	Descrizione Description	Applicazione Application	Conf. Pack.
14		RM19-010	Knife back	20x5,5x3200	1
		RM19-011	Knife back	20x5,5x3800	1

Notes

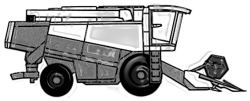

ARBOS

Barra di Taglio - *Cutting Bar*

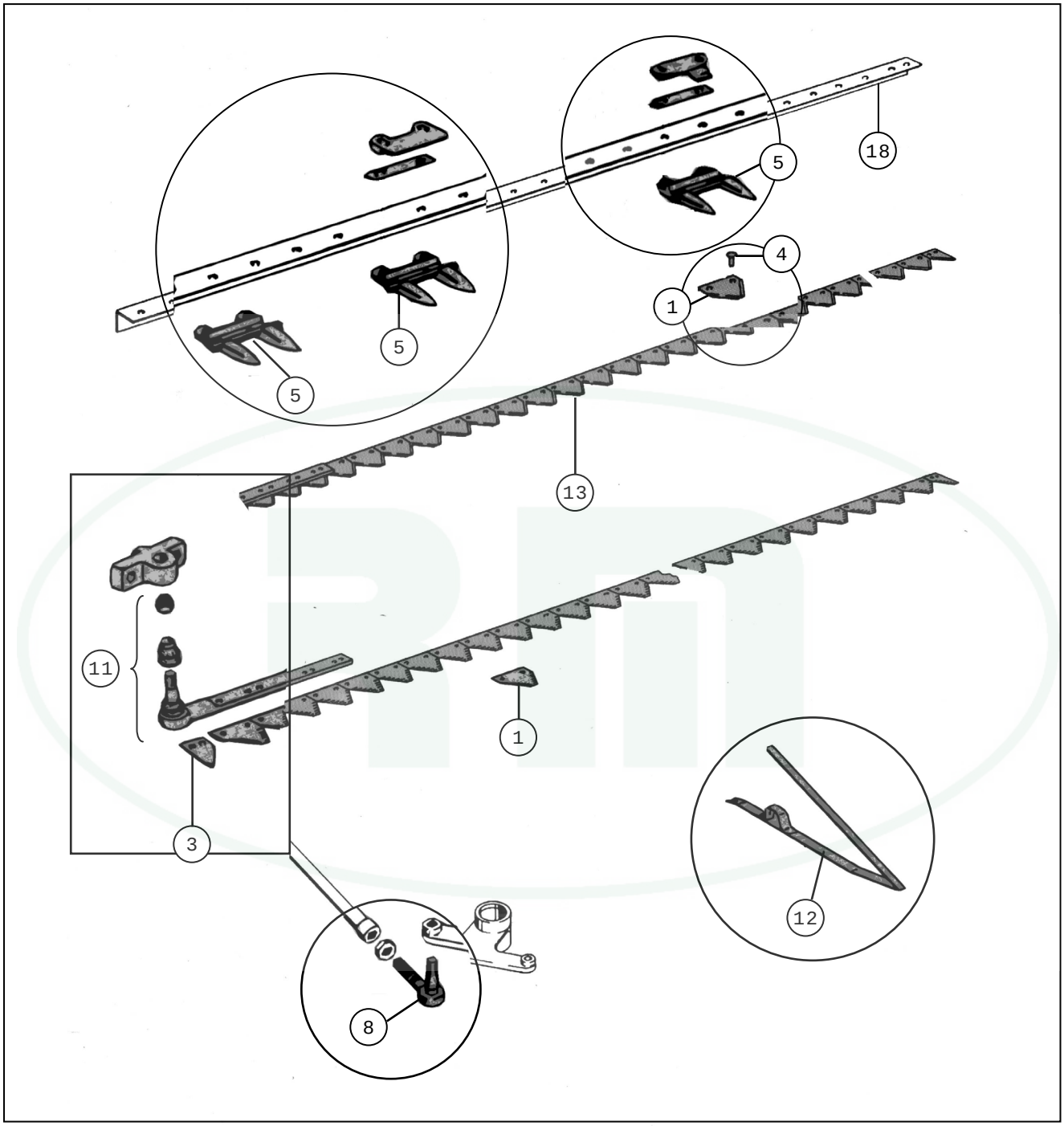

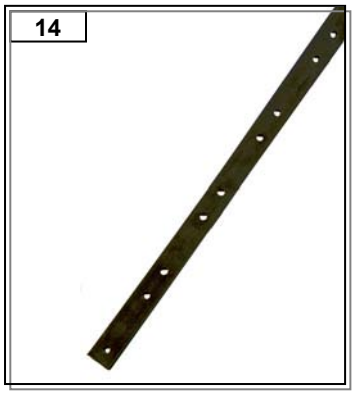

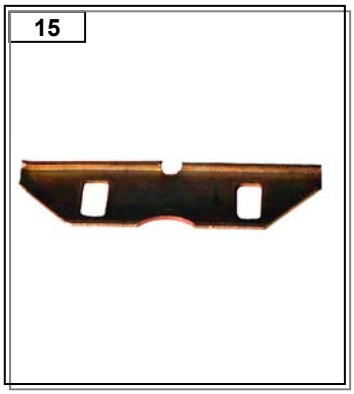

US = rigata sotto
TS = rigata sopra
TTQST = testa tonda quadro sotto t.
TT = testa tonda
TPSV = testa piana svasata

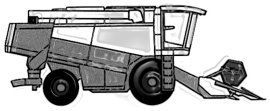

ARBOS

Pos.	Codice Originale	Codice RIMA	Descrizione Description	Applicazione Application	Conf. Pack.
			BARRA DI TAGLIO *Cutterbar*		
		RM02-061	Screw	11 x 30 con dado	50
		RM02-062	Screw	11 x 40 con dado	50
01	9145-5,5	RM02-001	Knife section	2,0 mm. - 59174	25
	9145-7,5	RM02-002	Knife section	2,0 mm.	25
	B.64861	RM02-003	Knife section	2,0 mm. - 206236	25
	B.70899	RM02-004	Knife section	2,7 mm. - 206236	25
03	13218	RM02-010	Plate		1
	A.50562	RM02-011	Plate		1
04		RM02-042	Rivet	5,2 x 14- x 25- x 28	2
05	B.51418	RM02-005	Double finger	B.21958	1
	B.64902	RM02-006	Double finger	1896130	1
08	57794	RM02-046	Ball joint	diam. 30 X 1,5	1
	57795	RM02-047	Ball joint	diam. 30 X 1,5	1
	7617	RM02-084	Ball joint	1200 - 16 x 1	1
	7618	RM02-085	Ball joint	1200 - 16 x 2	1
09	A.28466	RM02-043	Knife clip		10
11	73353	RM02-053	Ball joint	11441000	1
	A.50471	RM02-045	Knife head		1
	B.39685	RM02-009	Knife head		1
	B.59176	RM02-007	Knife head		1
	C.73351	RM02-008	Knife head		1
12		RM02-083	Crop lifter	1100	1
		RM02-102	Bolt		1
13		RM02-034	Complete knife	B.59176 - 6,50 mts	1
	C.50607	RM02-022	Complete knife	B.59176 - 4,80 mts	1
	C.57719	RM02-024	Complete knife	B.59176 - 6,00 mts	1
	C.59190	RM02-013	Complete knife	B.39685 - 2,80 mts	1
	C.59191	RM02-015	Complete knife	B.39685 - 3,20 mts	1
	C.59192	RM02-016	Complete knife	B.39685 - 3,60 mts	1
	C.59193	RM02-019	Complete knife	B.39685 - 4,20 mts	1
	C.65614	RM02-012	Complete knife	B.59176 - 2,80 mts	1
	C.65615	RM02-014	Complete knife	B.59176 - 3,20 mts	1
	C.65616	RM02-017	Complete knife	B.59176 - 3,60 mts	1
	C.65617	RM02-018	Complete knife	B.59176 - 4,20 mts	1
	C.68126	RM02-021	Complete knife	B.59176 - 4,53 mts	1
	C.70896	RM02-028	Complete knife	B.59176 - 3,60 mts	1

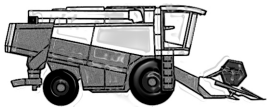

ARBOS

Pos.	Codice Originale	Codice RIMA	Descrizione Description	Applicazione Application	Conf. Pack.
13	C.70901	RM02-031	Complete knife	B.59176 - 4,80 mts	1
	C.71191	RM02-027	Complete knife	B.59176 - 3,20 mts	1
	C.71193	RM02-029	Complete knife	B.59176 - 4,20 mts	1
	C.71198	RM02-030	Complete knife	B.59176 - 4,53 mts	1
	C.71202	RM02-032	Complete knife	B.59176 - 5,40 mts	1
	C.71205	RM02-033	Complete knife	B.59176 - 6,00 mts	1
	C.73350	RM02-023	Complete knife	C.73351 - 4,80 mts	1
	C.74943	RM02-020	Complete knife	C.73351 - 4,20 mts	1
	C.76520	RM02-026	Complete knife	C.73351 - 3,60 mts	1
14		RM02-041	Knife back	25 x 6-6,50	1
	B.57720/0	RM02-040	Knife back	25 x 6-6,00	1
	B.59177	RM02-035	Knife back	25 x 6-3,20	1
	B.59178	RM02-036	Knife back	25 x 6-3,60	1
	B.59179	RM02-037	Knife back	25 x 6-4,20	1
	B.61245	RM02-039	Knife back	25 x 6-4,80	1
	C.68127	RM02-038	Knife back	25 x 6-4,50	1
15	A.26641	RM02-044	Wearing plate		1
16	C.2405	RM02-058	Finger plate		1

Notes

ARBOS

Coclea - *Auger*

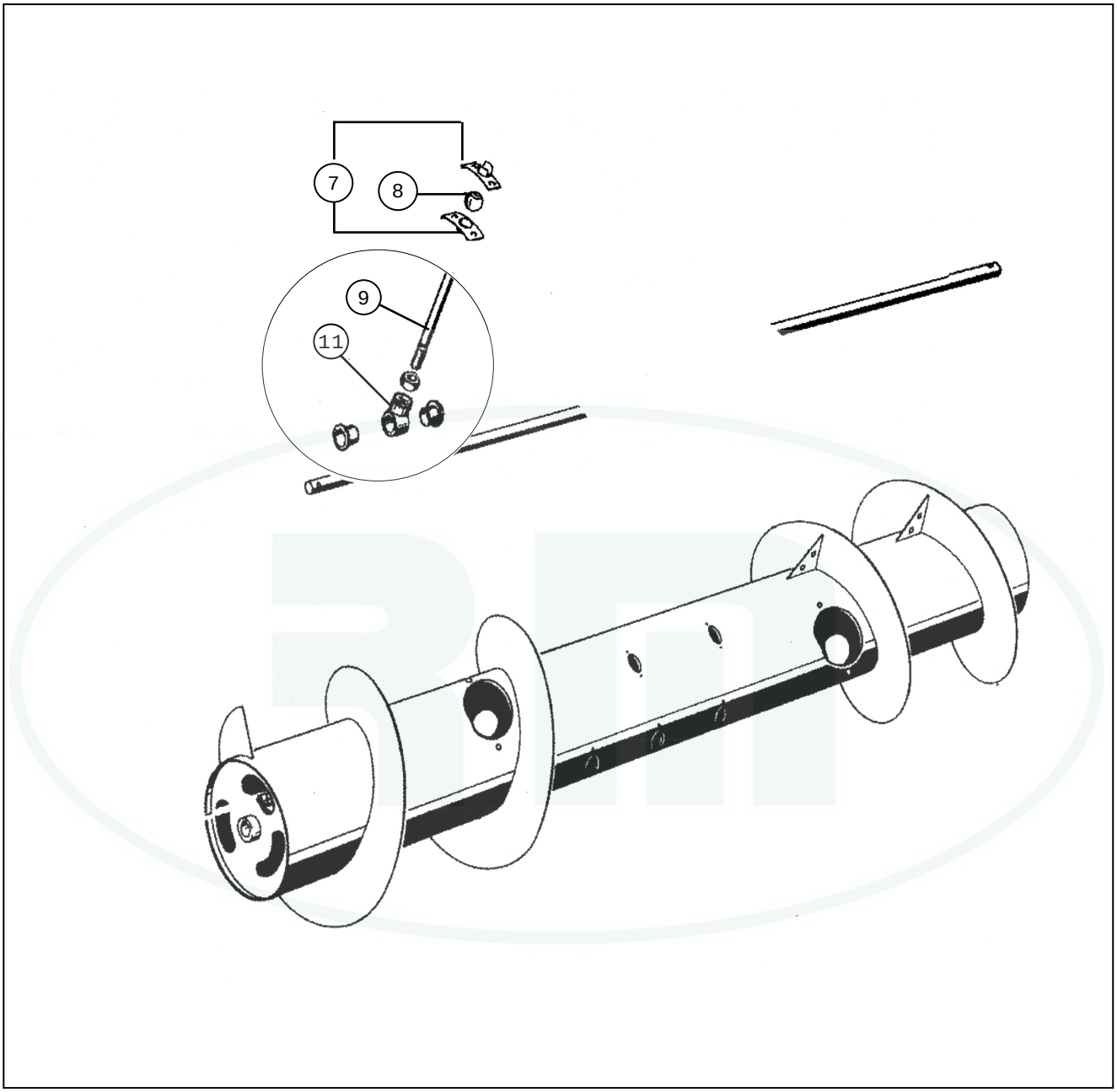

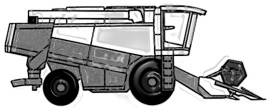

ARBOS

Pos.	Codice Originale	Codice RIMA	Descrizione Description	Applicazione Application	Conf. Pack.
			COCLEA *Auger*		
07	A.19913/14	RM02-049	Supports kit		1
08	A.19912	RM02-057	Guide ball	diam. 18	1
09	63190	RM02-060	Retractable finger	14x165	10
	A.19911	RM02-051	Retractable finger		10
	A.31000	RM02-059	Retractable finger	14x225	10
11	A.30999	RM02-086	T bushing	320816	20
	A.30999/A	RM02-087	T bushing		20

ARBOS

Battitore – *Treshing Device*

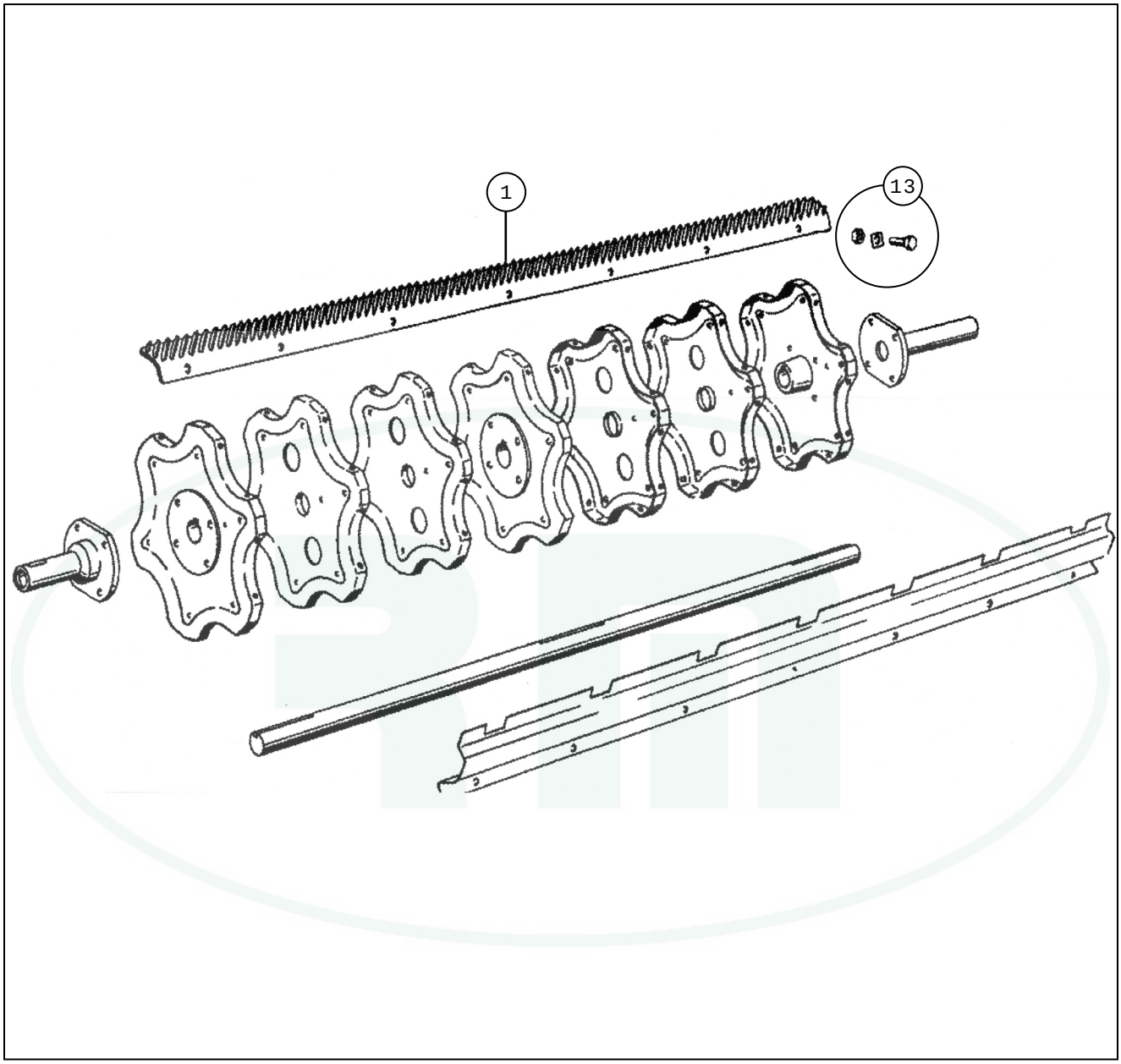

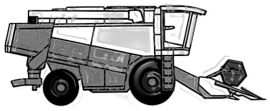

ARBOS

Pos.	Codice Originale	Codice RIMA	Descrizione Description	Applicazione Application	Conf. Pack.
			BATTITORE *Treshing Device*		
01	3652	RM02-075	Rasp bar set	Record	1
	4083	RM02-094	Rasp bar set	Record	1
	69694	RM02-081	Rasp bar set	140 - 1? tipo	1
	69695	RM02-100	Rasp bar set	140 - 1? tipo	1
	B.23611	RM02-078	Rasp bar set	1220	1
	B.23612	RM02-097	Rasp bar set	1220	1
	B.27082	RM02-069	Rasp bar set	Record	1
	B.27083	RM02-088	Rasp bar set	Record	1
	B.27501	RM02-071	Rasp bar set	1220	1
	B.27502	RM02-090	Rasp bar set	1220	1
	B.38379	RM02-076	Rasp bar set	Pantera	1
	B.38380	RM02-095	Rasp bar set	Pantera	1
	B.38382	RM02-070	Rasp bar set	Pantera	1
	B.38383	RM02-089	Rasp bar set	Pantera	1
	B.38385	RM02-079	Rasp bar set	Tigre	1
	B.38386	RM02-098	Rasp bar set	Tigre	1
	B.38388	RM02-072	Rasp bar set	Tigre	1
	B.38389	RM02-091	Rasp bar set	Tigre	1
	B.48515	RM02-073	Rasp bar set	Lince	1
	B.48516	RM02-092	Rasp bar set	Lince	1
	B.49313	RM02-074	Rasp bar set	Lince 100 - 565 al.	1
	B.49314	RM02-093	Rasp bar set	Lince 100 - 565 al.	1
	B.52317	RM02-077	Rasp bar set	Giaguaro - 125 - 705	1
	B.52318	RM02-096	Rasp bar set	Giaguaro - 125 - 705	1
	B.63278	RM02-082	Rasp bar set	160	1
	B.63279	RM02-101	Rasp bar set	160	1
	B.66884	RM02-080	Rasp bar set	140-800	1
	B.66885	RM02-099	Rasp bar set	140-800	1
12	B.64916	RM02-054	Spike tooth	16 x 45	1
13		RM02-103	Bolt		1

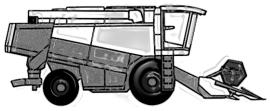

ARBOS

Pos.	Codice Originale	Codice RIMA	Descrizione Description	Applicazione Application	Conf. Pack.
			VARIE *Various*		
	A.18738	**RM02-055**	**Rubber paddle**		**50**
	A.58356	**RM02-063**	**Silentblock**		**1**
	B.23731	**RM02-065**	**Clutch disc**	105600	**1**
	B.25352	**RM02-064**	**Clutch disc**	82800	**1**

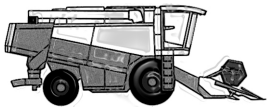

ARBOS

Pos.	Codice Originale	Codice RIMA	Descrizione Description	Applicazione Application	Conf. Pack.
			CINGHIE *Belts*		
	A 30094		BELT		1
	A 30103		BELT		1
	A 41225		BELT		1
	A 48817		BELT		1
	A 48818		BELT		1
	A 48826		BELT		1
	A 48827		BELT		1
	A 48828		BELT		1
	A 51148		BELT		1
	A 51163		BELT		1
	A 51191		BELT		1
	A 51197		BELT		1
	A 51210		BELT		1
	A 52702		BELT		1
	A 52732		BELT		1
	A 52733		BELT		1
	A 52771		BELT		1
	A 52772		BELT		1
	A 55405		BELT		1
	A 57674		BELT		1
	A 61083		BELT		1

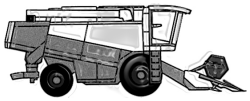

LOVA

Barra di Taglio - *Cutting Bar*

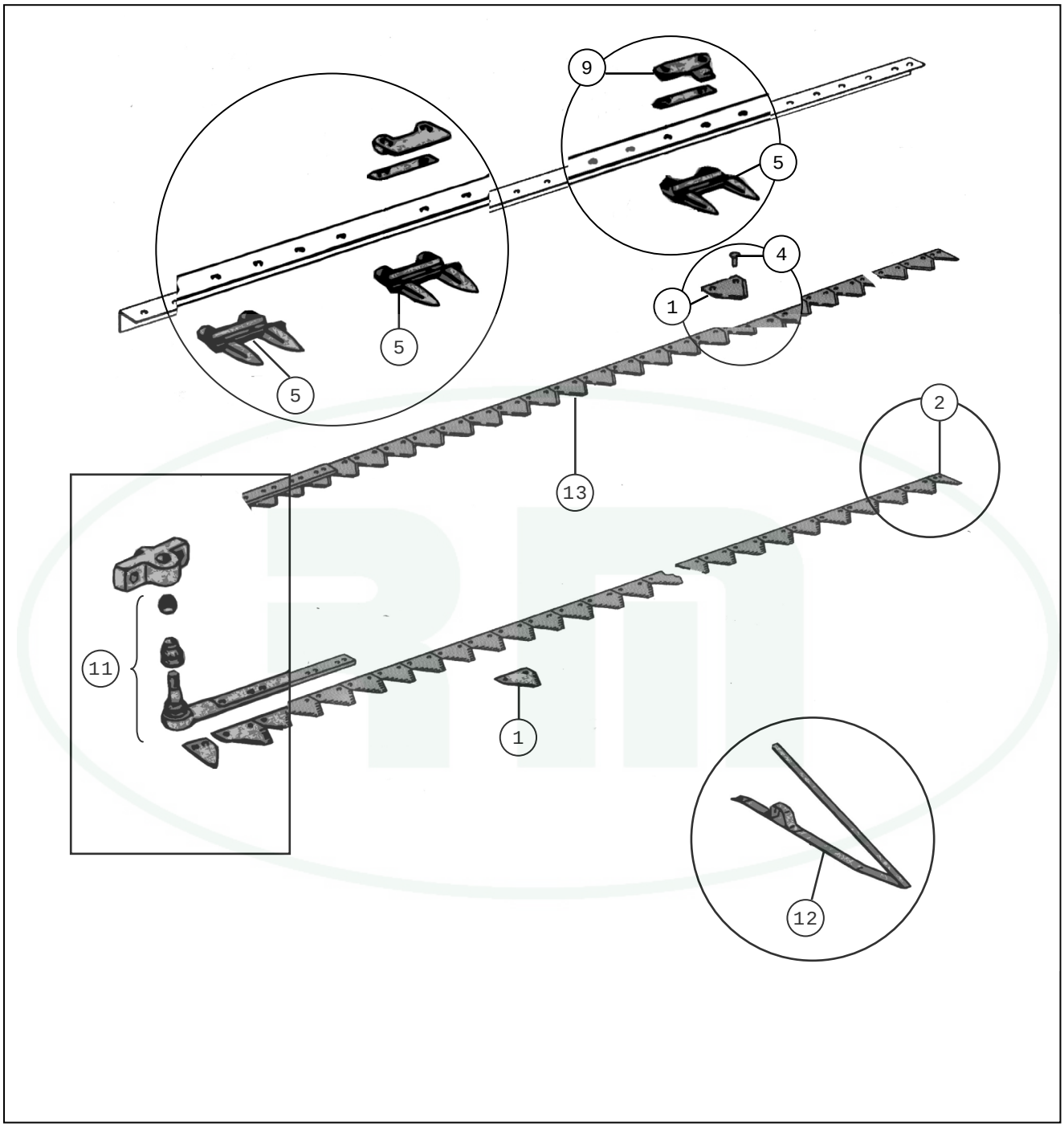

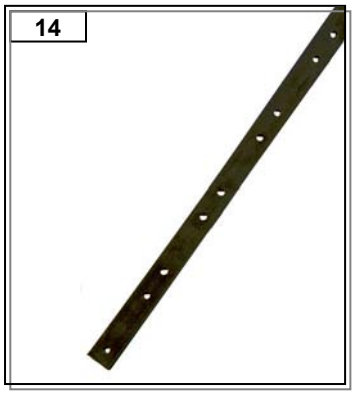

US = rigata sotto
TS = rigata sopra
TTQST = testa tonda quadro sotto t.

TT = testa tonda
TPSV = testa piana svasata

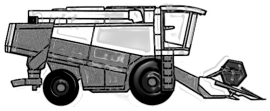

LOVA

Pos.	Codice Originale	Codice RIMA	Descrizione Description	Applicazione Application	Conf. Pack.
			BARRA DI TAGLIO *Cutterbar*		
01	206236/A	RM23-001	Knife section	2,7 mm.	1
02	06236	RM23-024	Half section	2,7 mm.	1
04		RM23-027	Rivet		2
05	049312/1	RM23-021	Double finger	tipo "MulchPIPPO	1
	1896130	RM23-011	Double finger		1
	B.21958/A	RM23-010	Double finger		1
09	206195/A	RM23-002	Knife clip		10
	6108518/A	RM23-023	Knife clip		10
	6586630/A	RM23-022	Knife clip		10
	A.28466/A	RM23-012	Knife clip		10
11	20494/A	RM23-09	Knife head		1
	670120/A	RM23-017	Knife head		1
	676231/A	RM23-018	Knife head		1
12		RM23-028	Crop lifter		1
		RM23-029	Bolt		1
13		RM23-015	Complete knife	4,40 mts	1
		RM23-016	Complete knife	4,80 mts	1
		RM23-019	Complete knife	4,40 mts	1
		RM23-020	Complete knife	4,80 mts	1
14		RM23-013	Knife back	20x6	1
		RM23-014	Knife back	20X6	1

Coclea - *Auger*

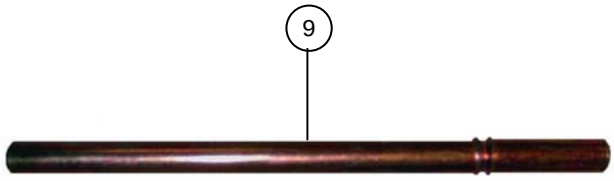

Trinciapaglia - *Straw Chopper*

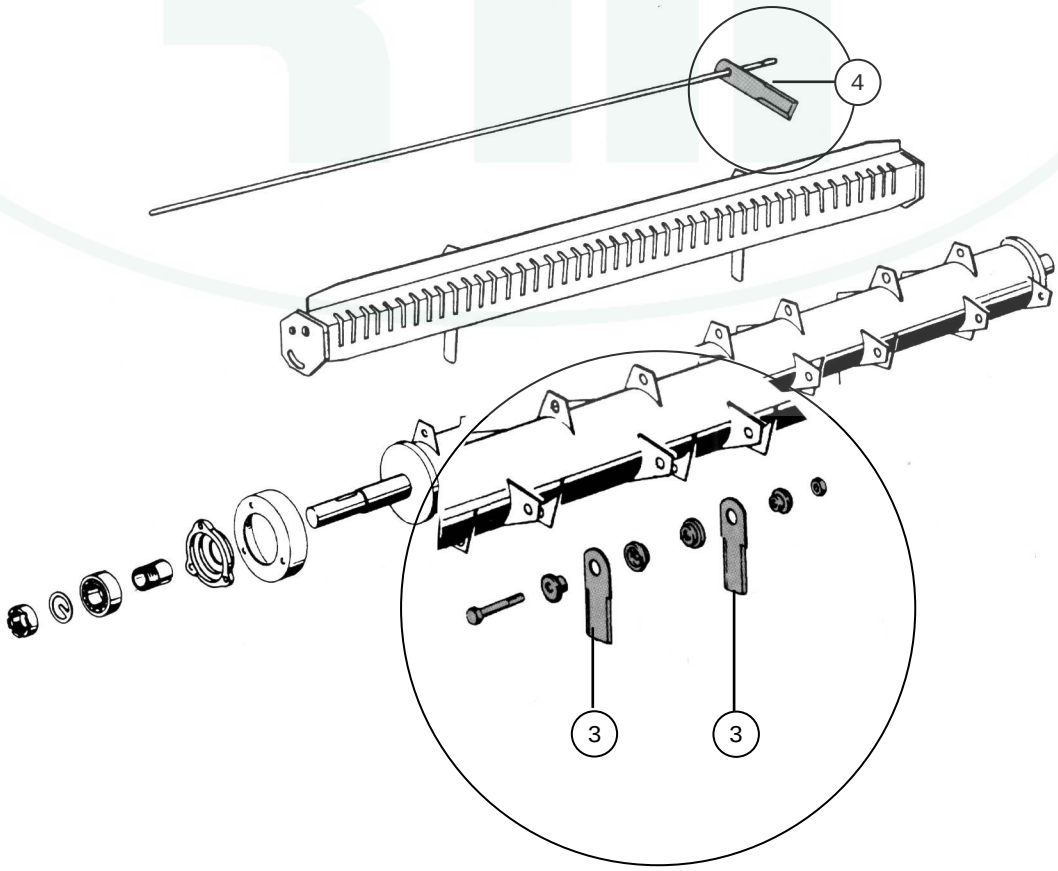

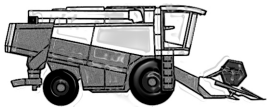

LOVA

Pos.	Codice Originale	Codice RIMA	Descrizione Description	Applicazione Application	Conf. Pack.
			COCLEA *Auger*		
09		RM23-025	Retractable finger	diam. 15 x 206	10
		RM23-026	Retractable finger	diam. 15 x 206	10
			TRINCIAPAGLIA *Straw Chopper*		
03	2209	RM39-049	Straw chopper blade		20
	288014050032	RM39-002	Straw chopper blade		20
04	2309	RM39-050	Counterknife		20
	288014020017	rm39-001	Straw chopper blade		20

GEHL

Barra di Taglio - *Cutting Bar*

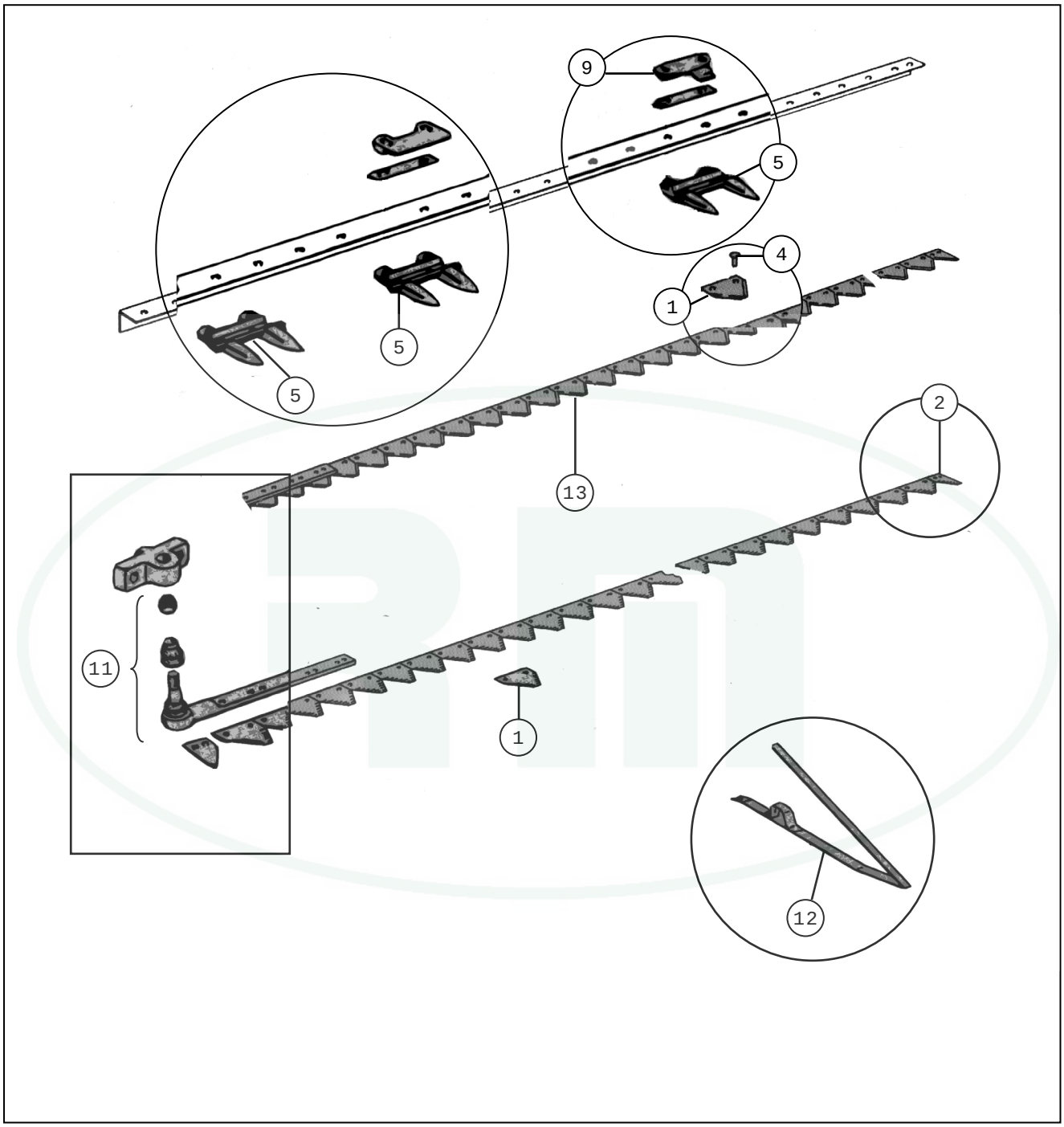

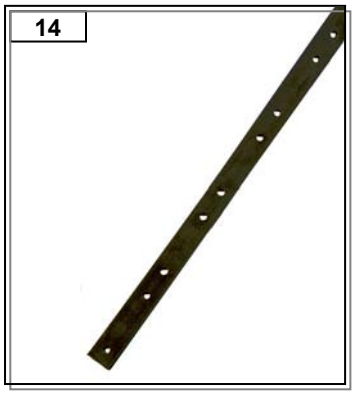

US = rigata sotto
TS = rigata sopra

TTQST = testa tonda quadro sotto t.
TT = testa tonda
TPSV = testa piana svasata

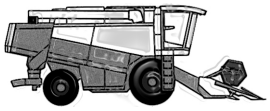

GEHL

Pos.	Codice Originale	Codice RIMA	Descrizione Description	Applicazione Application	Conf. Pack.
			BARRA DI TAGLIO *Cutterbar*		
01	060635	RM16-009	Knife section	2,7 mm. M22831 Cr.	1
	S16145	RM16-010	Knife section	P78674	1
04		RM16-013	Rivet		2
05	049312/A	RM16-001	Double finger		1
	059827	RM16-004	Double finger	379720	1
09	061503	RM16-002	Knife clip	6586630	10
	065759	RM16-003	Knife clip	6586622	10
11	060320	RM16-005	Knife head		1
	060321	RM16-006	Head extension		1
12		RM16-014	Crop lifter		1
		RM16-015	Bolt		1
13		RM16-011	Complete knife		1
	060323	RM16-008	Complete knife	060338	1
14		RM16-012	Knife back	20 x 5,5 x 2300	1
	060322	RM16-007	Knife back	20 x 5,5 x 2900 - 060337	1

CRESSONI

Barra di Taglio - *Cutting Bar*

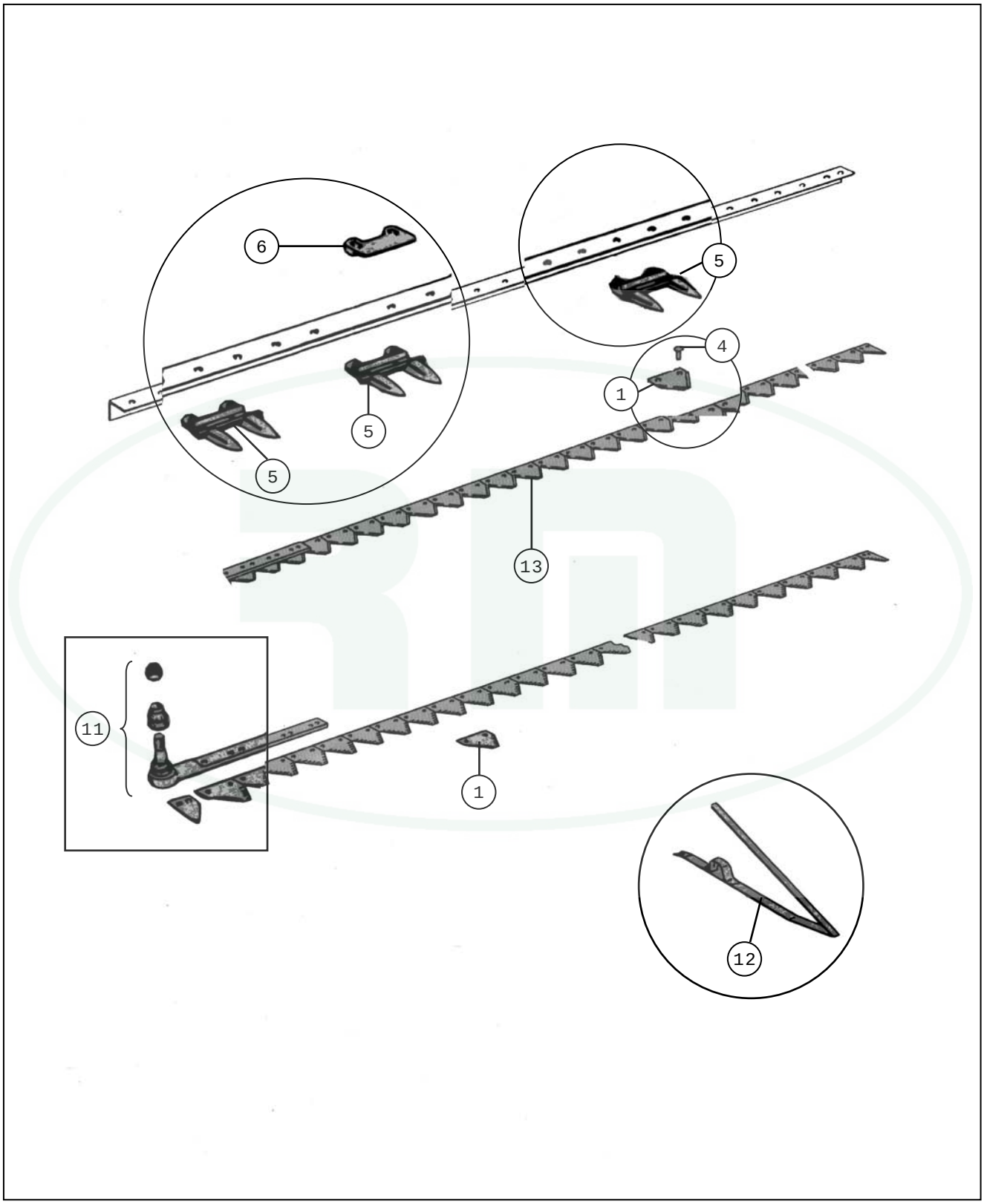

US = rigata sotto
TS = rigata sopra

TTQST = testa tonda quadro sotto t.
TT = testa tonda
TPSV = testa piana svasata

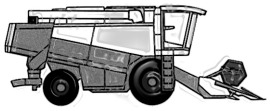

CRESSONI

Pos.	Codice Originale	Codice RIMA	Descrizione Description	Applicazione Application	Conf. Pack.
			BARRA DI TAGLIO *Cutterbar*		
01	049916	RM44-001	Knife section		25
	420100045	RM44-003	Knife section		25
	84998682CR	RM44-002	Knife section	755207	25
04	19M8425	RM44-005	Bolt		1
05		RM44-033	Double finger		1
	410100001	RM44-004	Double finger		1
06		RM44-034	Knife clip		1
11	11040002	RM44-006	Knife head	759650	1
	1604012B-dx	RM44-008	Knife head		1
	1604012B-sx	RM44-007	Knife head		1
12	111500116	RM44-009	Crop lifter	ASX100	1
13	1104006a	RM44-018	Complete knife		1
	1104009a	RM44-017	Complete knife		1
	1104012a	RM44-016	Complete knife		1
	1604014-A	RM44-023	Complete knife		1
	1604014a-2	RM44-020	Complete knife		1
	1604014a-3	RM44-021	Complete knife		1
	1604014a-4	RM44-022	Complete knife		1
	1604014-D	RM44-024	Complete knife		1
	160401a-1	RM44-019	Complete knife		1
	160401a-5	RM44-025	Connector		1
	1804007/a-1	RM44-010	Complete knife		1
	1804007/a-1	RM44-011	Complete knife		1
	1804007/a-2	RM44-012	Complete knife		1
	1804007/a-2	RM44-013	Complete knife		1
	1804007/a-3	RM44-014	Complete knife		1
	1804007/a-3	RM44-015	Complete knife		1

COLTELLI TRINCIAPAGLIA

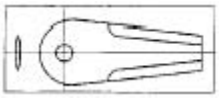
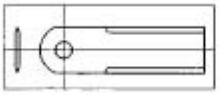
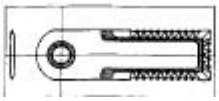
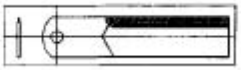

RIF.ORIG. N° GEN. CODE N°	RIF. RM RIMA CODE N°	DESCRIZIONE DESCRIPTION	DIMENSIONI / DIMENSIONS a	b	c	d	e
BISO							
288014050032	RM39-002	Coltello liscio	173	90	50	18	3
288014050034	RM39-004	Coltello = 2872720280000	173	100	50	18	4
288014020017	RM39-001	Controcoltello	198,5	100	50	6	3
28274025000	RM39-006	Coltello dentato 2 lati=287405100000	173	100	50	18	4
28274490000	RM39-010	Coltello dentato 3 lati=287404100000	173	100	50	18	4
28274024000	RM39-008	Controcoltello dentato	198,5	100	50	10	3
28274024000	RM39-009	Controcoltello dentato	198,5	100	50	6	4
28801405012/3	RM39-041	Boccola 3 mm					3
28801405012/4	RM39-042	Boccola 4 mm.					4
CLAAS							
060017.2	RM39-002	Coltello	173	100	50	18	3
060030.2	RM39-013	Controcoltello	195	100	50	12	3
755874.0	RM39-550	Coltello c/boccola	175	100	50	20	4
736872.0	RM39-062	Coltello	173	100	50	20	4
065294.0	RM39-063	Coltello dentato	173	100	50	18	3
065642.0	RM39-064	Coltello con tungsteno	173	100	50	18	3
755784.0	RM39-006	Coltello dent. 2 lati	173	100	50	18	4
755875	RM39-083	Coltello dent. 3 lati con boccola	173	100	50	18	4
060016/3	RM39-041	Boccola 3 mm.					3
060015.0	RM39-292	Boccola interna					4
736870	RM39-042	Boccola					
736871	RM39-070	Boccola					
755787	RM39-071	Coltello con boccola					
755785	RM39-072	Coltello con boccola-tungsteno	175	100	50	20	4
755786	RM39-073	Coltello					
LAVERDA							
320706150	RM39-020	Controcoltello - 2009	185	110	50	11	3
321723250	RM39-018	Coltello - 2109	173	100	50	18	3
322291650	RM39-001	Controcoltello	198,5	100	50	10	3
322291650/D	RM39-008	Controcoltello dentato	198,5	100	50	10	3
	RM39-041	Boccola 3 mm.					3
	RM39-042	Boccola 4 mm.					4
N.HOLLAND							
746812	RM39-032	Coltello	173	100	50	18	3
746813	RM39-033	Coltello	173	100	50	18	4
9510635	RM39-006	Coltello dentato 2 lati	173	100	50	18	4
	RM39-010	Coltello dentato 3 lati	173	100	50	18	4
9516450	RM39-008	Controcoltello dentato	198,5	100	50	10	3
	RM39-042	Boccola 4 mm.					4
LOVA							
2209	RM39-049	Coltello m/m 3.0	164		47	21	3
2309	RM39-050	Controcoltello	197		47	12	3
288014050032	RM39-002	Coltello liscio	173	90	50	18	3
288014020017	RM39-001	Controcoltello	198,5	100	50	10	3

290

STRAW - CHOPPER BLADES

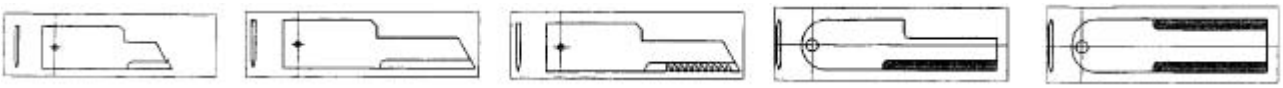

RIF.ORIG. N° GEN. CODE N°	RIF. RM RIMA CODE N°	DESCRIZIONE DESCRIPTION	DIMENSIONI / DIMENSIONS a	b	c	d	e
DEUTZ FAHR							
1600.0616	RM39-014	Controcoltello dentato	198,5	100	50	10	3
0654.5847	RM39-015	Coltello 288014050034	173	100	50	18	4
0620.4848	RM39-016	Controcoltello 288014020017	198,5	199	50		3
CASE-IHC							
1994760C4	RM39-076	Coltello doppio bisello c/boccola	175	115	50	20	4,5
1322233C2	RM39-039	Controcoltello liscio	175	104	40	10,5	3
1322241	RM39-045	Coltello					
1322233C2/D=40151/2	RM39-043	Controcoltello dentato	175	104	40	10,5	3
49005700	RM39-043	Coltello	173	104	40	10	3
49018300	RM39-045	Controcoltello	198,5	199	50		3
JOHN DEERE							
Z.35221	RM39-002	Coltello	173	90	50	18	3
Z.42176	RM39-024	Coltello	173	110	50	18	5
Z.48234	RM39-004	Coltello = Z.53454	173	100	50	18	4
Z.55610	RM39-010	Coltello dentato 3 lati	173	100	50	18	4
Z.35241	RM39-022	Controcoltello	190	107	50	12	3
Z.35241 D	RM39-023	Controcoltello dentato	190	107	50	12	3
Z.55611	RM39-026	Controcoltello	190	107	50	12	3
Z.55611 D	RM39-027	Controcoltello dentato	190	107	50	12	3
Z.59020	RM39-029	Controcoltello	198,5	100	50		3
Z.59033	RM39-030	Controcoltello dentato	198,5	100	50		3
Z.45994	RM39-031	Coltello	172		50		5
M. FERGUSON							
	RM39-006	Coltello dentato 2 lati	173	100	50	18	4
	RM39-010	Coltello dentato 3 lati	173	100	50	18	4
	RM39-008	Controcoltello dentato	198,5	100	50		3
	RM39-042	Boccola 4 mm.					4
1730728M2	RM39-048	Coltello					
49005700	RM39-043	Coltello	173	104	40	10	3
49017800	RM39-044	Coltello	173	104	40	10	3
49018300	RM39-045	Controcoltello	198,5	199	50		3
49018900	RM39-046	Coltello	173	104	50		3
49019000	RM39-047	Coltello	195		50		3
REKORD							
41348	RM39-035	Coltello	175	105	50	20	3,5
40150	RM39-038	Controcoltello	199	74	50	2x20	2,5
44280	RM39-034	Coltello = 44000	175	100	50	20	4,5
40151/2 NEW-1999	RM39-043	Controcoltello	175	104	40	10,4	3
40151/2 FINO 1998	RM39-040	Controcoltello	175	104	40	10,4	3
40151 T.V.	RM39-039	Controcoltello	179	100	40	11	3
40151/D	RM39-051	Coltello dentato					
44000/D	RM39-065	Coltello dentato	175	100	50	20	4,5
44000/3	RM39-066	Coltello dentato 3 lati	175	100	50	20	4,5
118310	RM39-067	Coltello liscio	166	100	50	20	4,5
118311	RM39-068	Coltello liscio c/boccola	175	100	50	20	4,5
118311.1	RM39-069	Coltello dentato c/boccola	175	100	50	20	4,5

291

DENTI BATTITORI TEMPERATI
TEMPERED SPIKE TEETH

ARBOS

16x45
(RM02-054)

NEW-HOLLAND

16x50
(RM11-058)

LAVERDA

12x35
(RM22-045)

J. DEERE

16x45
(RM21-053)

J DEERE

12x30
(RM21-061)

TITAN

16x45
(RM40-001)

J. DEERE

16x45
(RM21-054)

TITAN

16x45
(RM40-002)

TITAN

16x50
(RM40-003)

CLAAS

14x40
(RM10-062)

NEW-HOLLAND

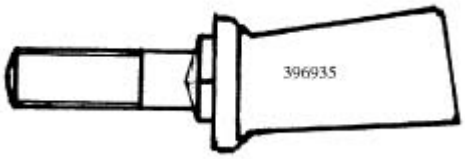

(RM11-059)

EQUIPAGGIAMENTO PER LA TRASFORMAZIONE MIETITREBBIE

DA GOMMATE A CINGOLATE

EQUIPMENT FOR TRANSFORMATION OF COMBINE HARVESTERS

FROM TYRES TO CRAWLERS

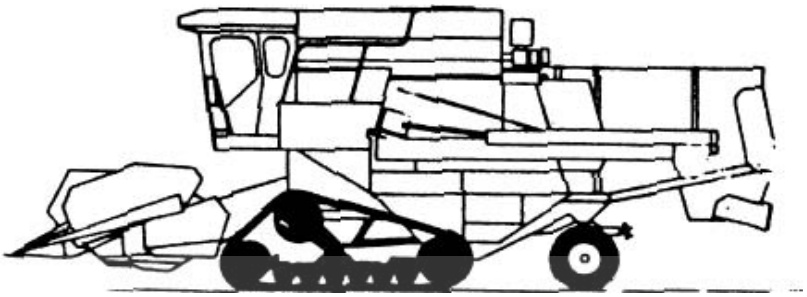

CINGOLATURA COMPLETA 4/31/700/*COMPLETE UNDERCARRIAGE 4/31 /700*
Con 4 rulli a catenarie a 31 passi/ *With 4 rollers and undercarriage with 31 pitchs:*

- Pattini acciaio 700 mm.
Steel shoes 700 mm

- Pattini gomma 700 mm.
Steel with plug shoes 700 mm.

CINGOLATURA COMPLETA 5/331600/*COMPLETE UNDERCARRIAGE 5/33/600*
Con 5 rulli a catenarie a 33 passi/ With 5 rollers and undercarriage with 33 pitchs:

- Pattini acciaio 600/700 mm.
Steel shoes 600/700 mm

- Pattini gomma 600/700 mm.
Steel with plug shoes 600/700 mm.

CINGOLATURA COMPLETA 6/35/700/*COMPLETE UNDERCARRIAGE 6/35/700*
Con 6 rulli a catenarie a 35 passi/ *With 6 rollers and undercarriage with 35 pitchs:*

- Pattini acciaio 700/800 mm.
Steel shoes 700/800 mm

- Pattini gomma 700/800 mm.
Steel with plug shoes 700/800mm.

CINGOLATURA COMPLETA 7/37/800/*COMPLETE UNDERCARRIAGE 7/37/800*
Con 7 rulli a catenarie a 37 passi/ *With 7 rollers and undercarriage with 37 pitchs:*

- Pattini acciaio 800/900 mm.
Steel shoes 800/900 mm

- Pattini gomma 800/900 mm.
Steel with plug shoes 800/900 mm.

N.B. Disponiamo di particolari CANTONE

RUOTE DIREZIONALI COMPLETE DI CERCHIO
9.5x24 - 11.2x28 - 9.5x36

Notes